Assembly instructions

Noah High Sleeper Loft Bed

The manufacturer's instructions follow unchanged, including all safety warnings, age and weight limits and part codes. Please read them in full before you start, and keep them for future reference.

View this product: www.cosybunks.co.uk/products/noah-high-sleeper-bed-chest-of-drawers-cube-storage-corner-sofa-bed

Need help with assembly?

Scan to contact us

info@cosybunks.co.uk
www.cosybunks.co.uk

Sold by Cosybunks (retailer). Instructions supplied by the manufacturer and reproduced unchanged.

Stompa®

www.stompa.com

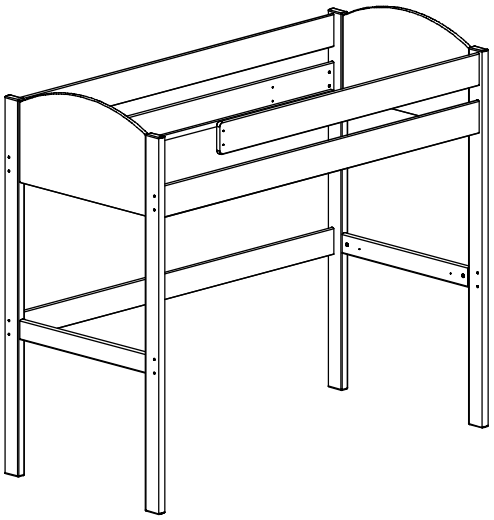

Art.nr. A002

(N) Gavler
(GB) Gable ends
(D) Giebelbretter

Art.nr. A003

(N) Sengeramme
(GB) Bedframe
(D) Bettrahmen

A002

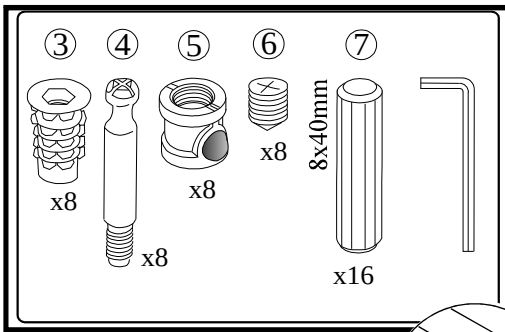

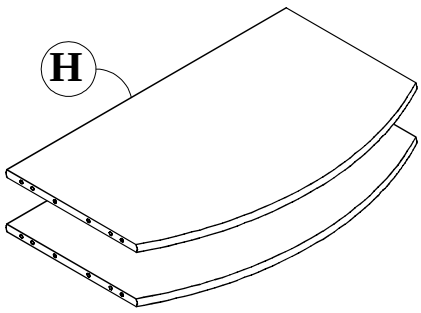

A003

Du trenger også et stjerne-skrujern og en hammer.
You also need a crosshead screwdriver and a hammer.
Zusätzlich brauchen Sie einen Kreuzschraubenzieher und einen Hammer.

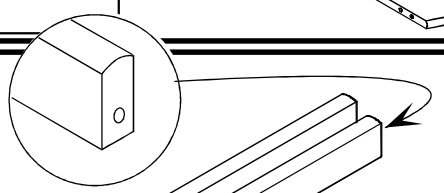

United Kingdom:

If anything should fail to give satisfaction, please contact your STOMPA stockist with details of any problems with the product. Please quote Art number & serial number on any correnspondence.

Stompa UK
The Old Mill House
Dockfield Road, Shipley
West Yorkshire, BD17 7AE
E-mail: stompa@stompa.co.uk
www.stompa.co.uk

Cosybunks | www.cosybunks.co.uk | info@cosybunks.co.uk | Need help? www.cosybunks.co.uk/pages/contact-us

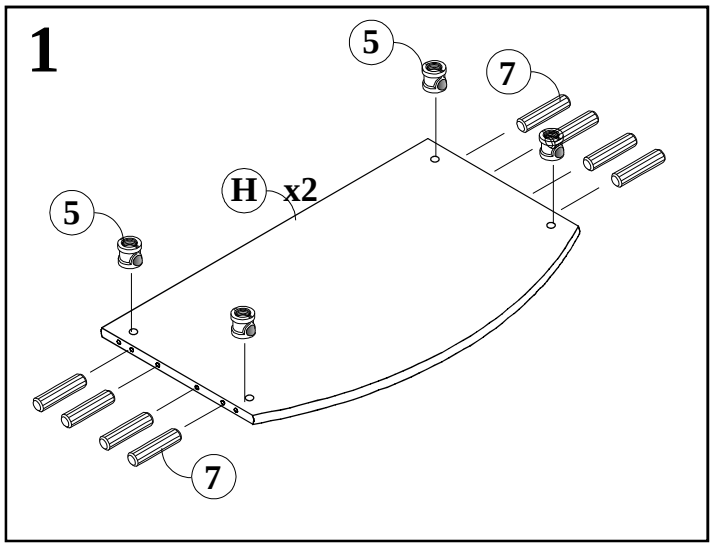
1
5
7
H x2
5
7

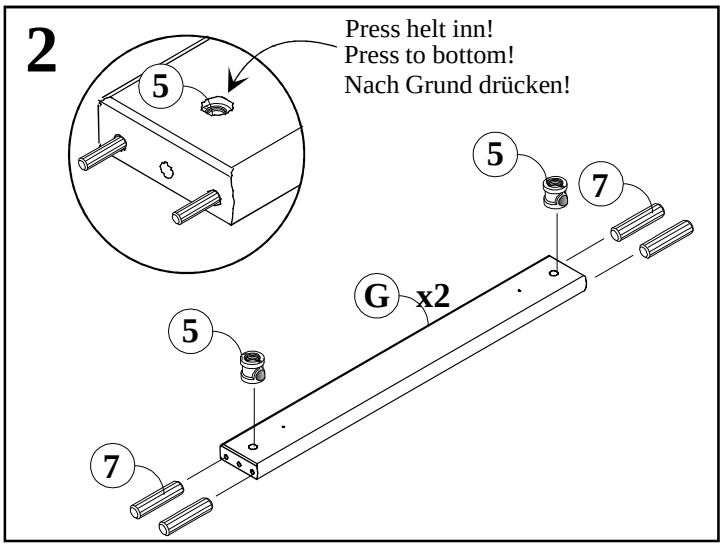
2
Press helt inn!
Press to bottom!
Nach Grund drücken!
5
5
7
G x2
5
7

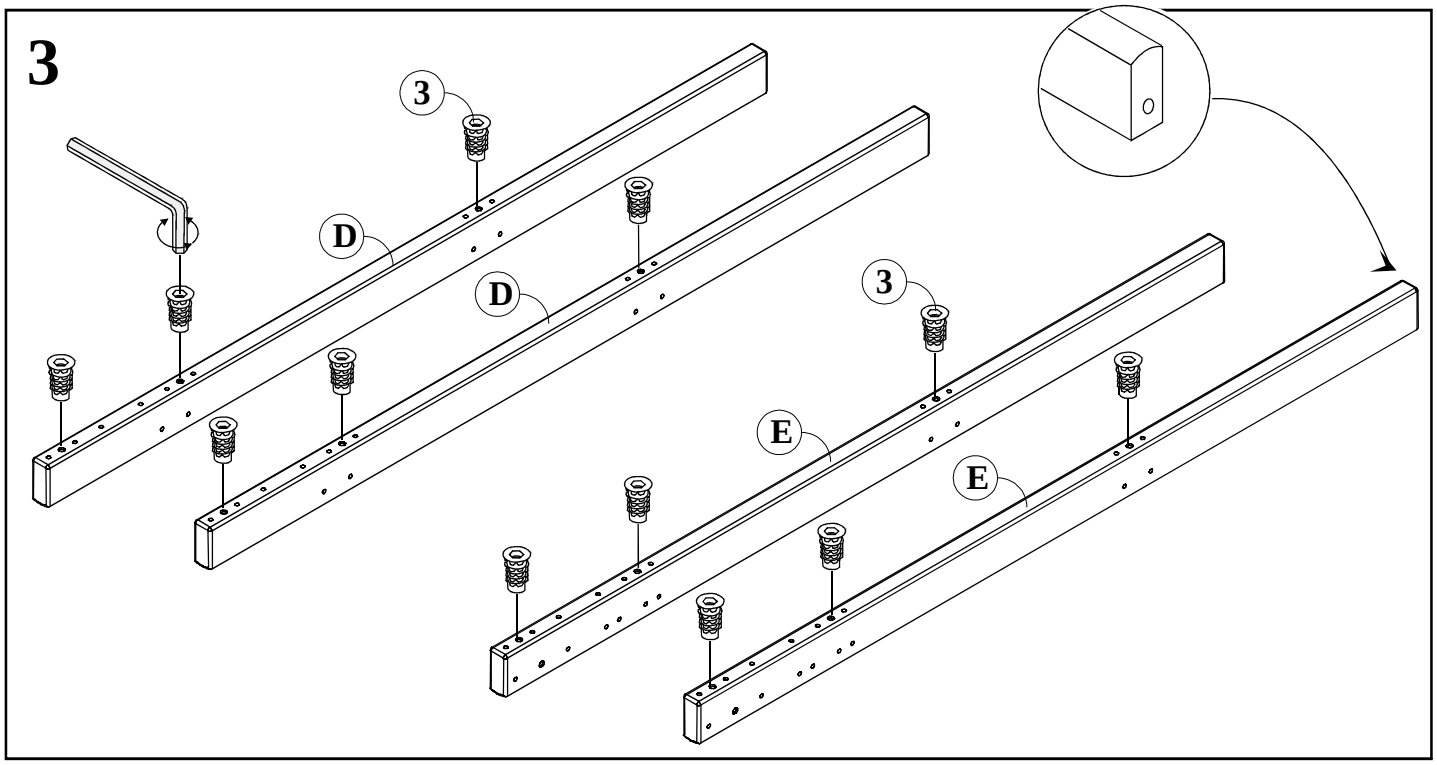
3
3
D
D
3
E
E

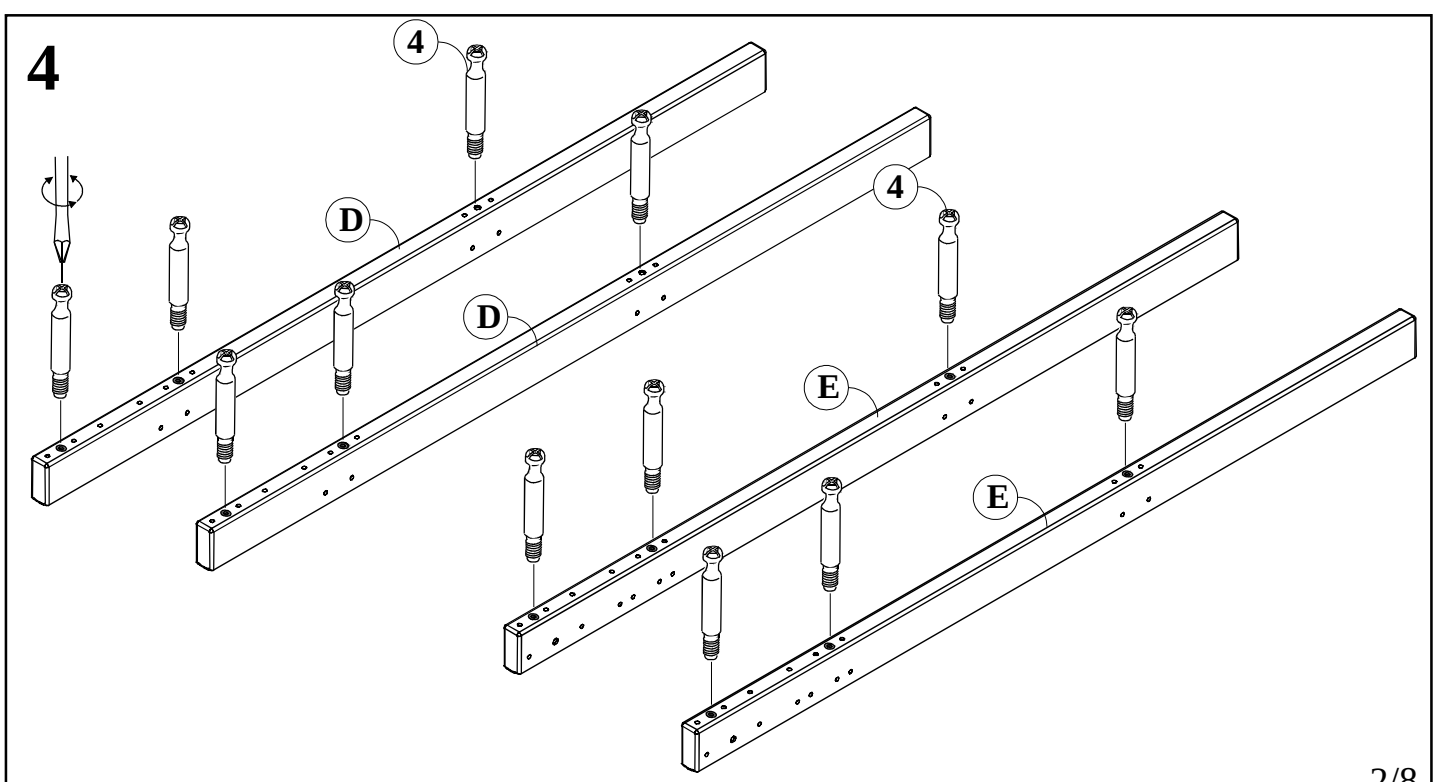
4
4
D
D
4
E
E

5

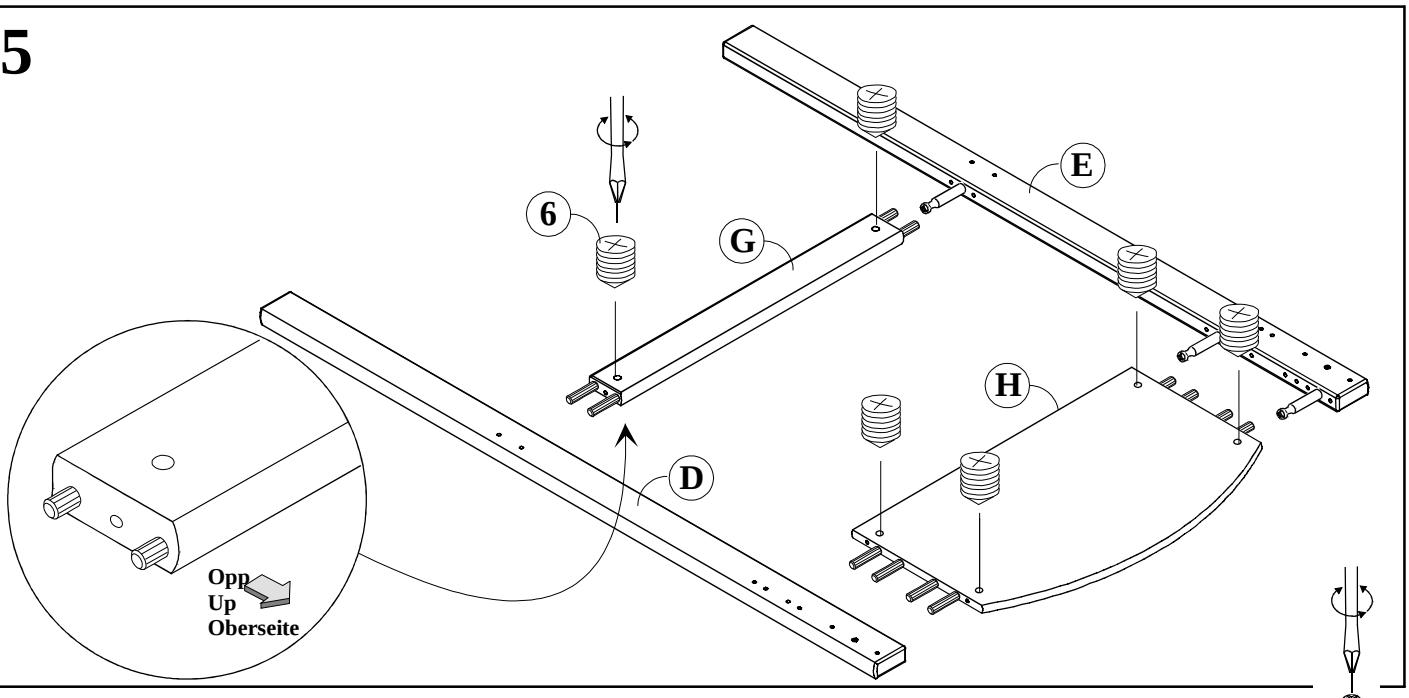

6

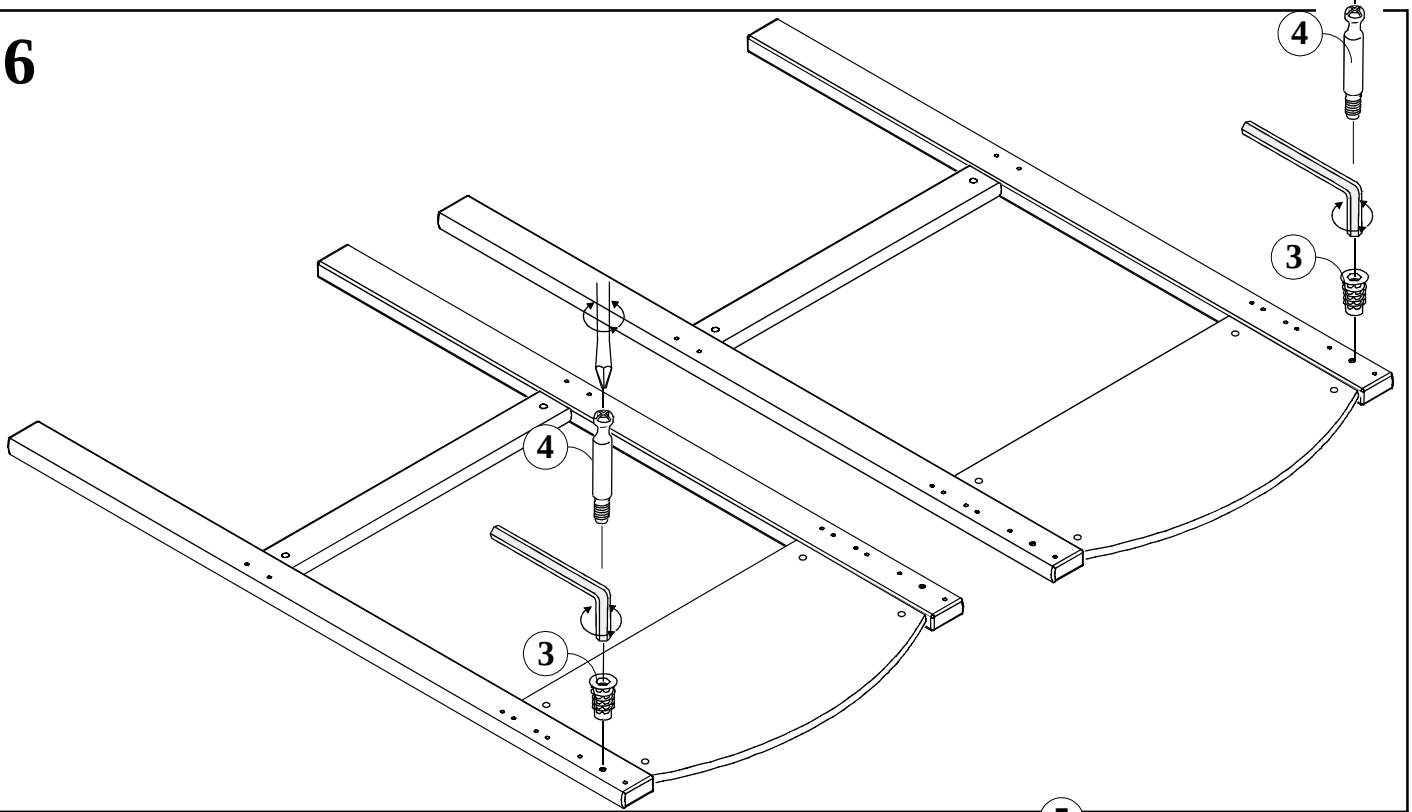

7

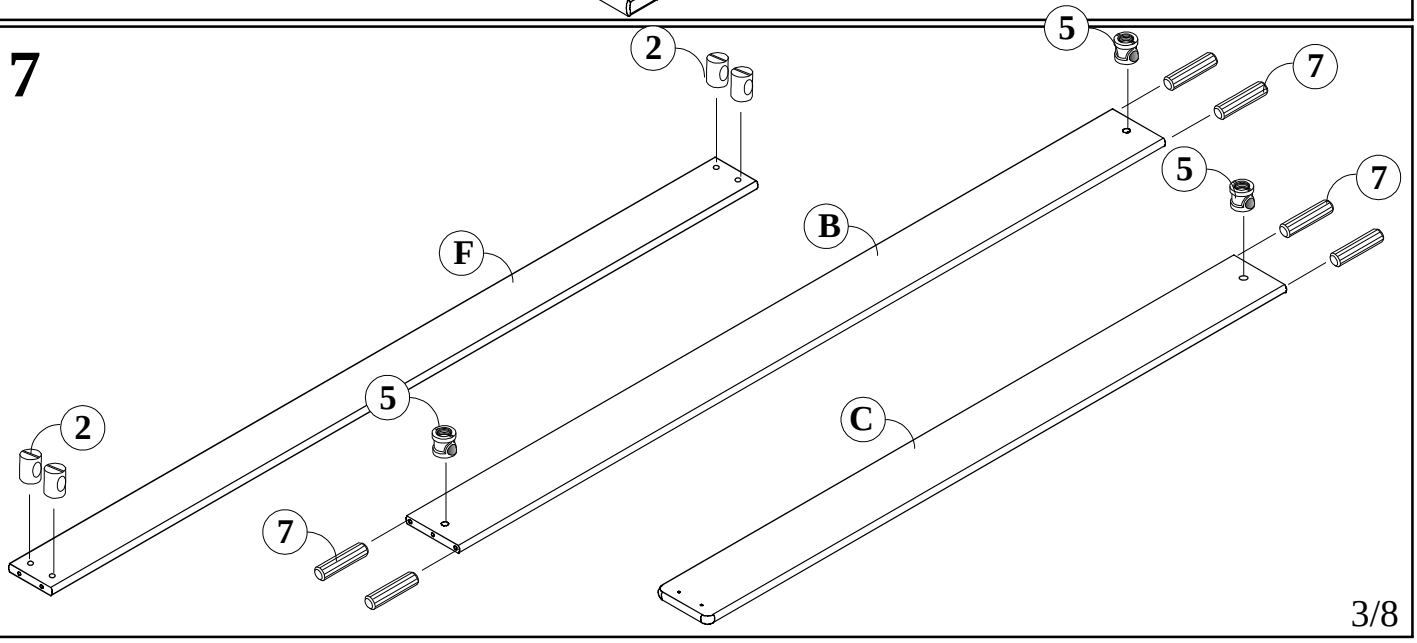

3/8

8

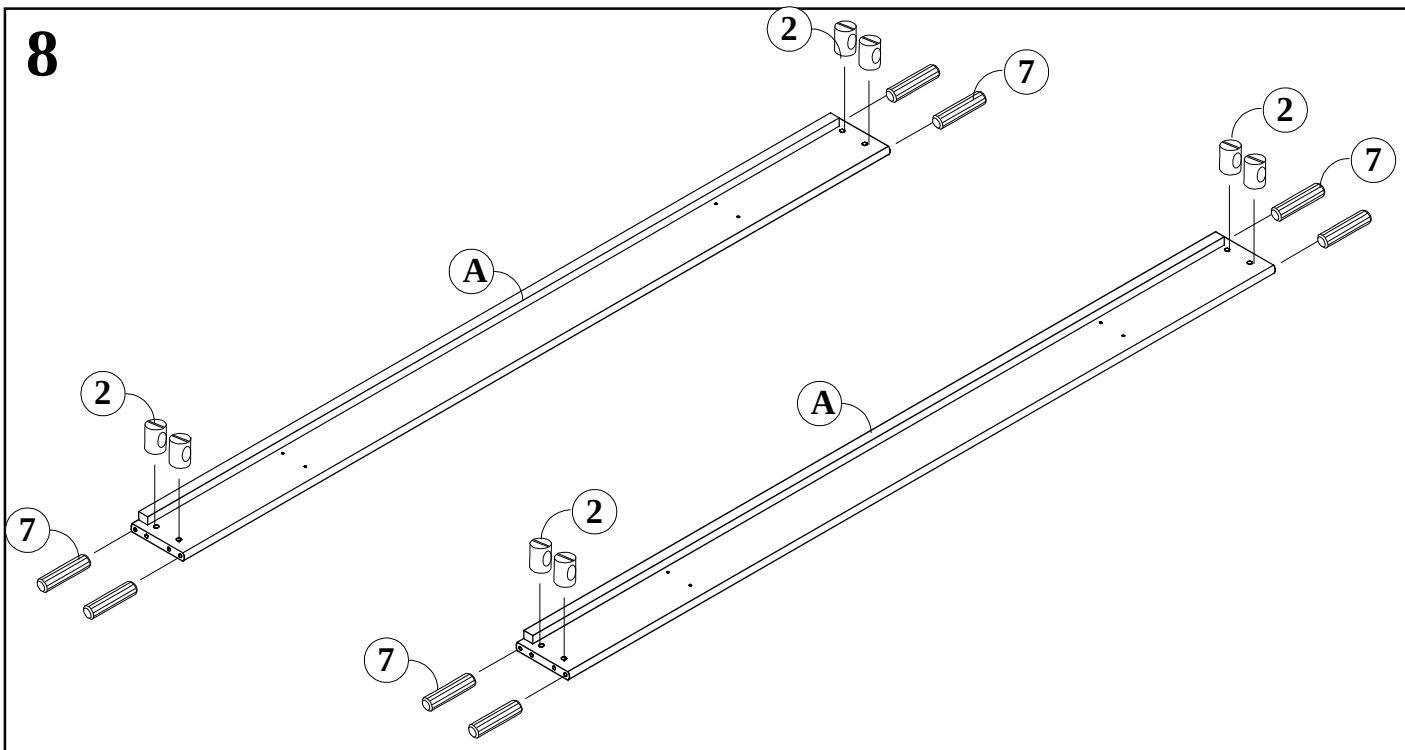

9

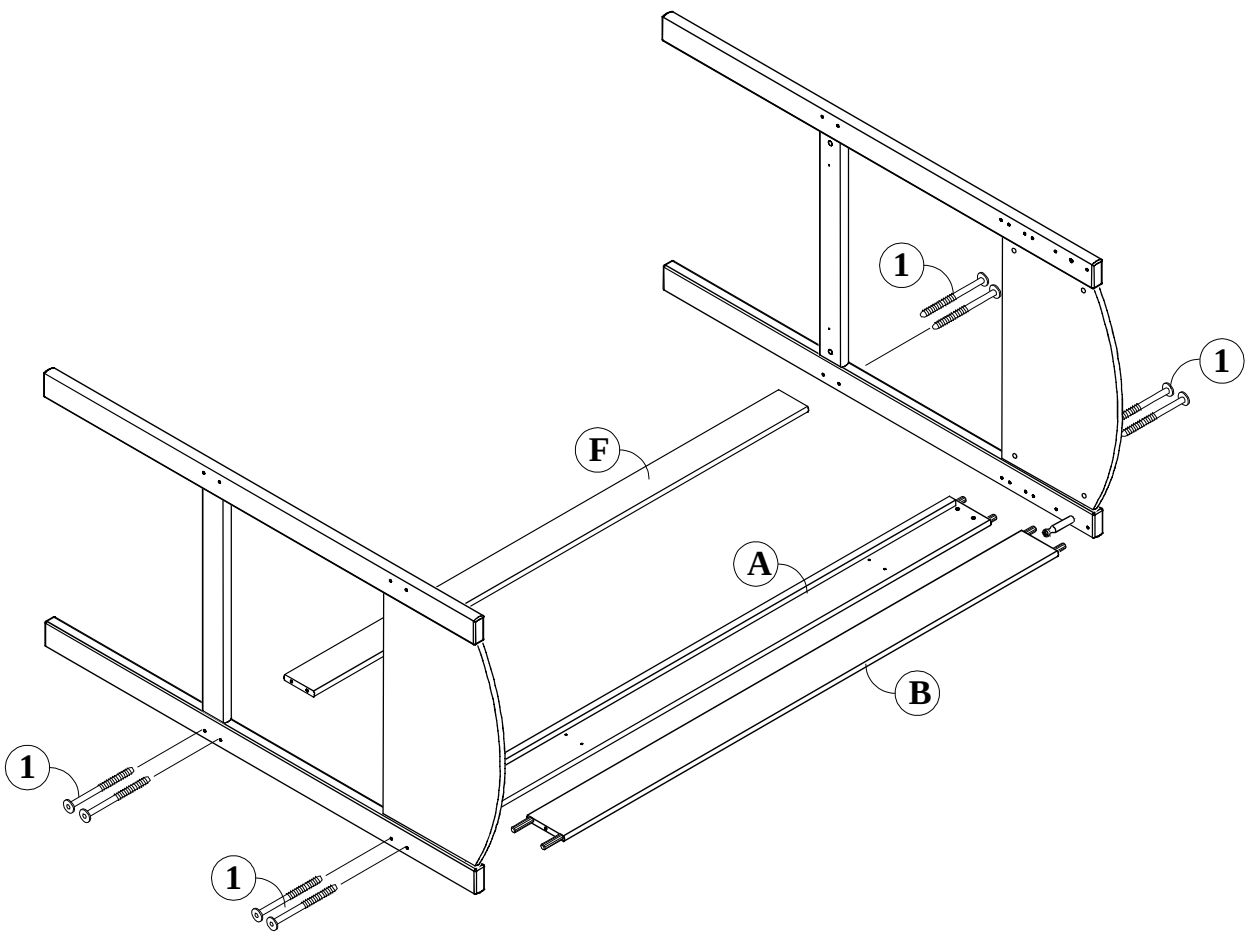

Bruk sølvskruer til en hvit seng, og messingskruer til en syrebeiset seng.
Use silver screws to a white bed, and brass screws to a sienna bed.
Benutzen Sie bitte die silberfarbigen Schrauben fuer ein weisses und die messingfarbigen Schrauben fuer ein antik lackiertes Bett.

4/8

10

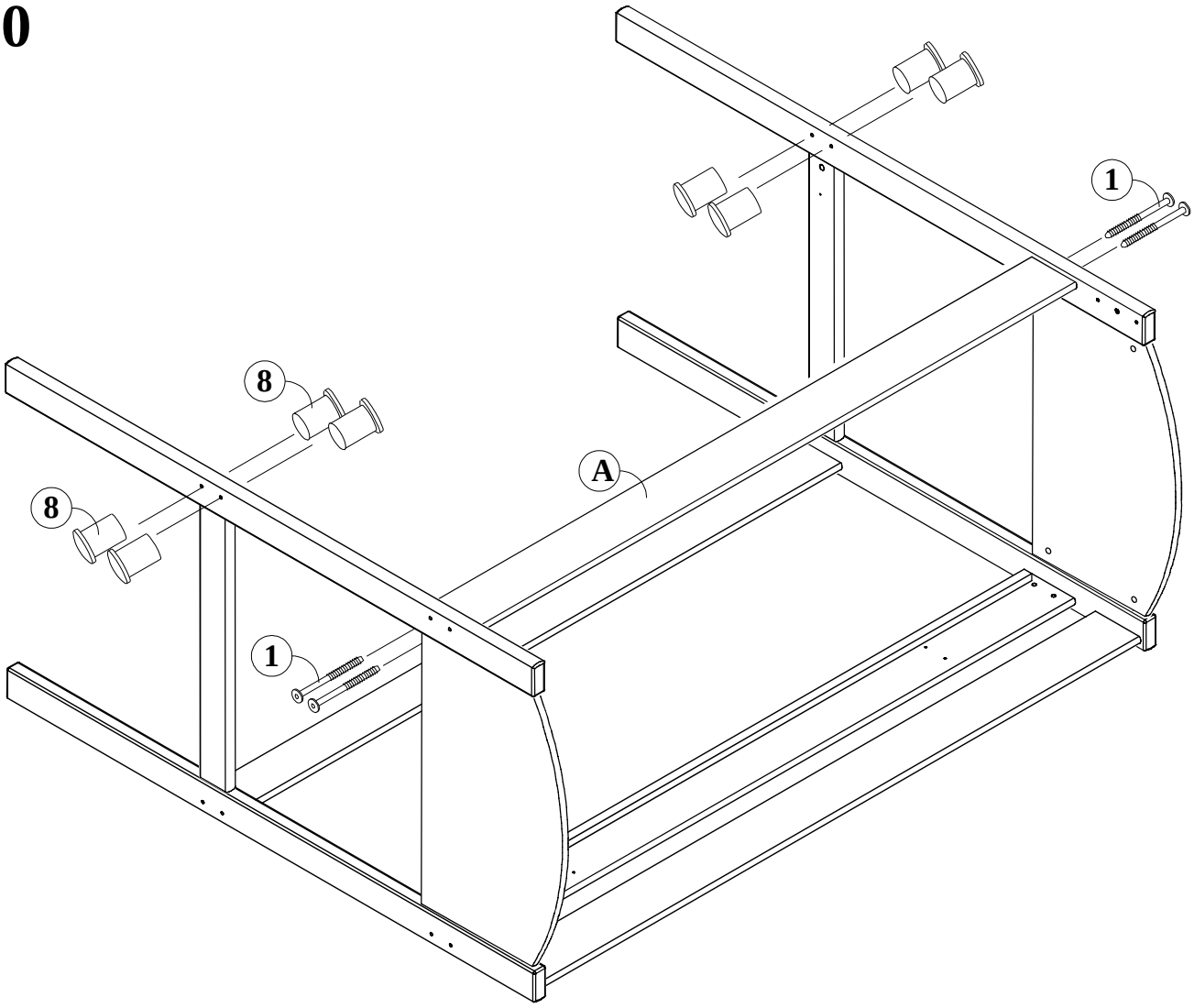

11

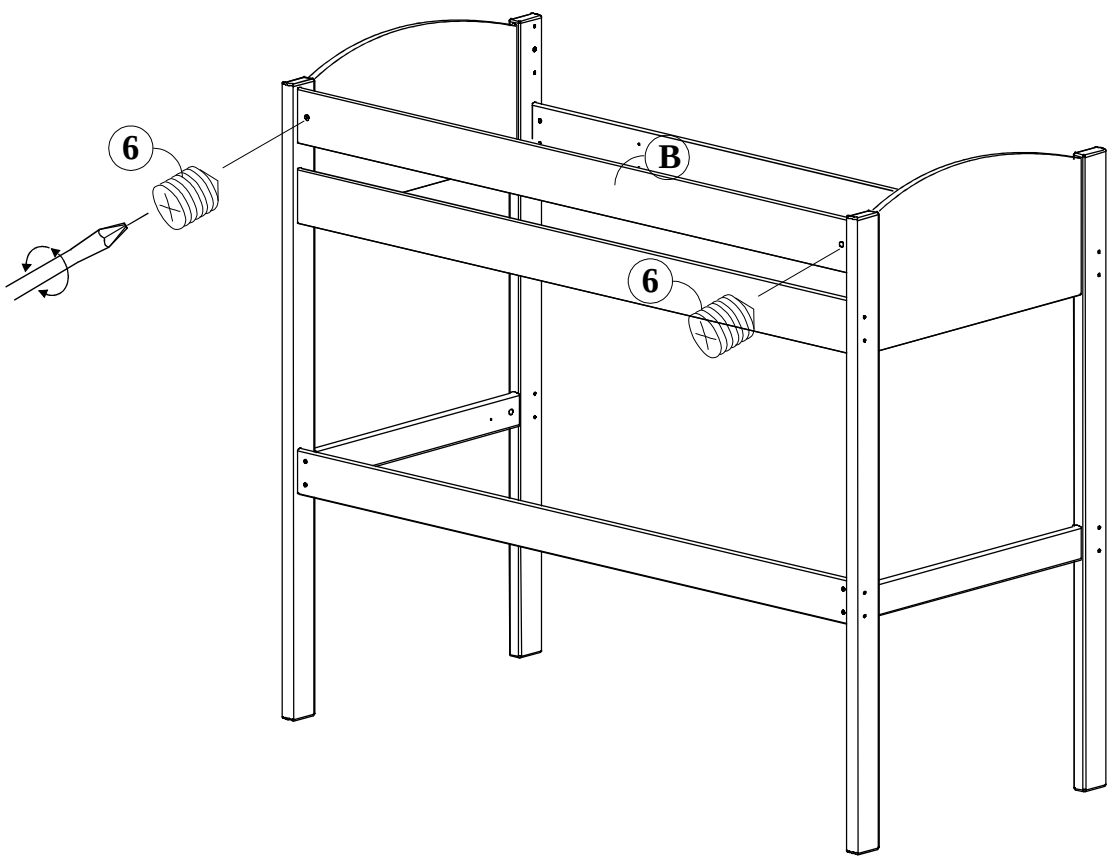

5/8

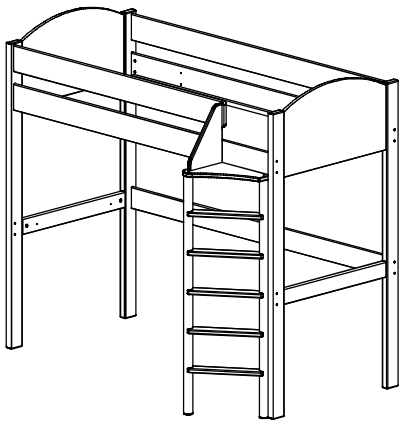

Stige til høyre
Ladder Right
Leiter rechts

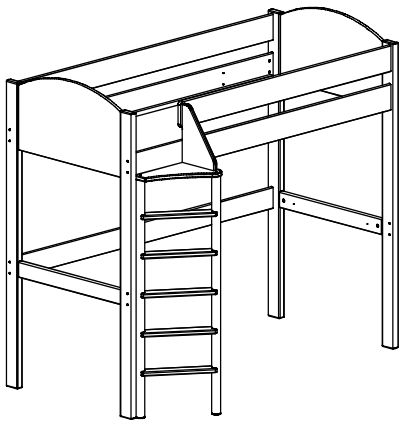

Stige til venstre
Ladder Left
Leiter links

12a

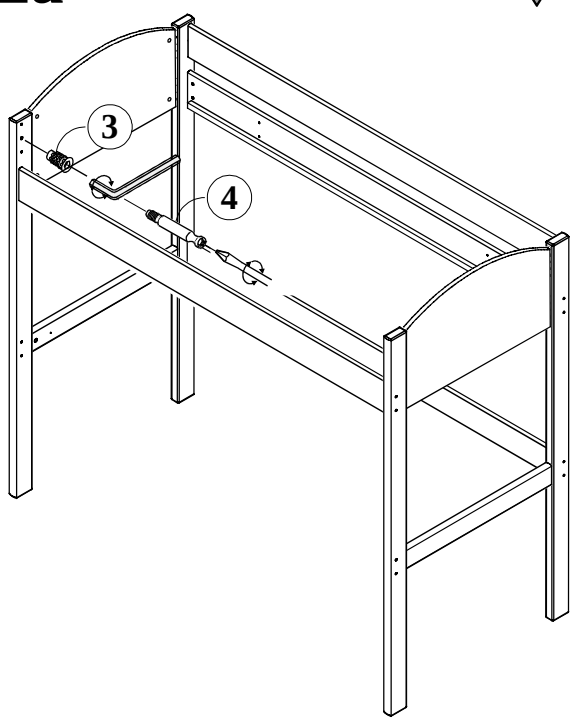

12b

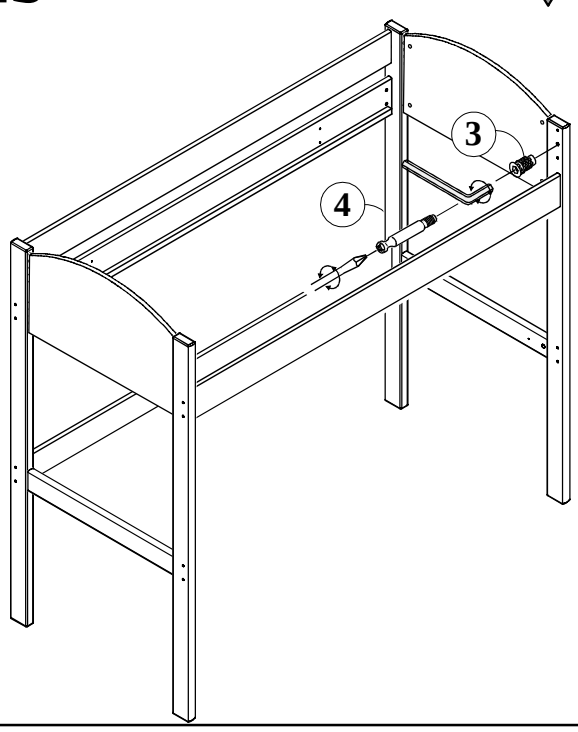

13a

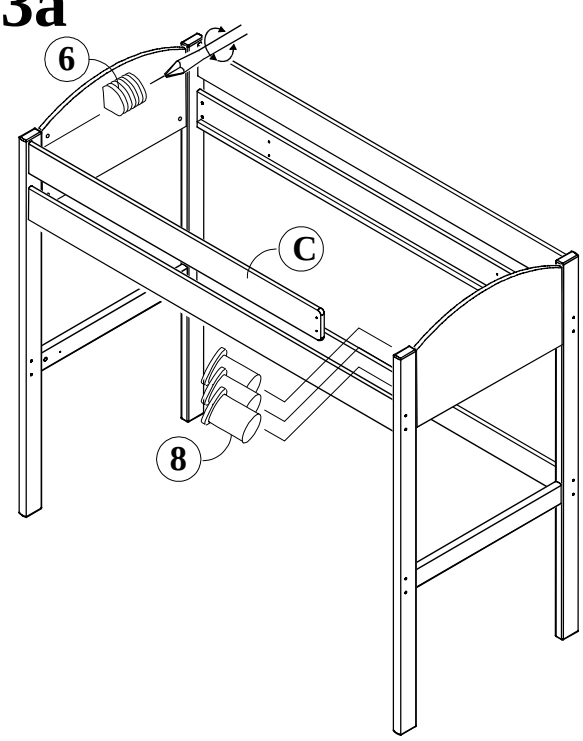

13b

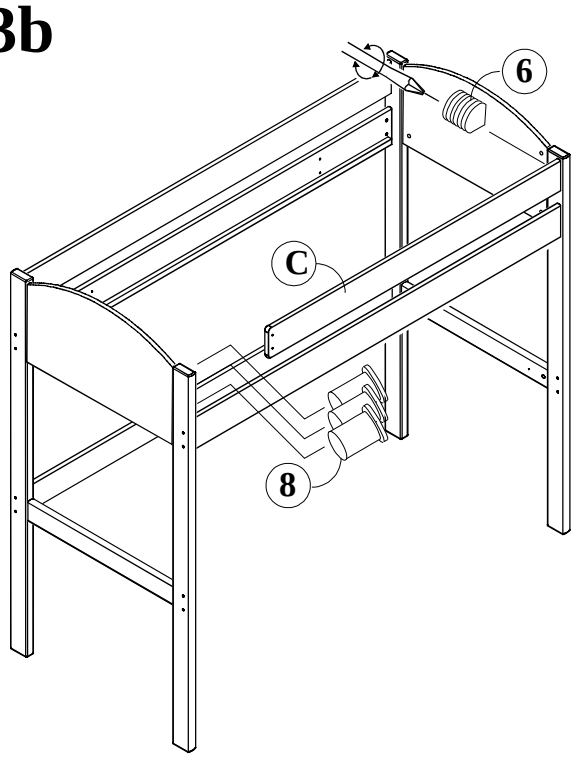

14

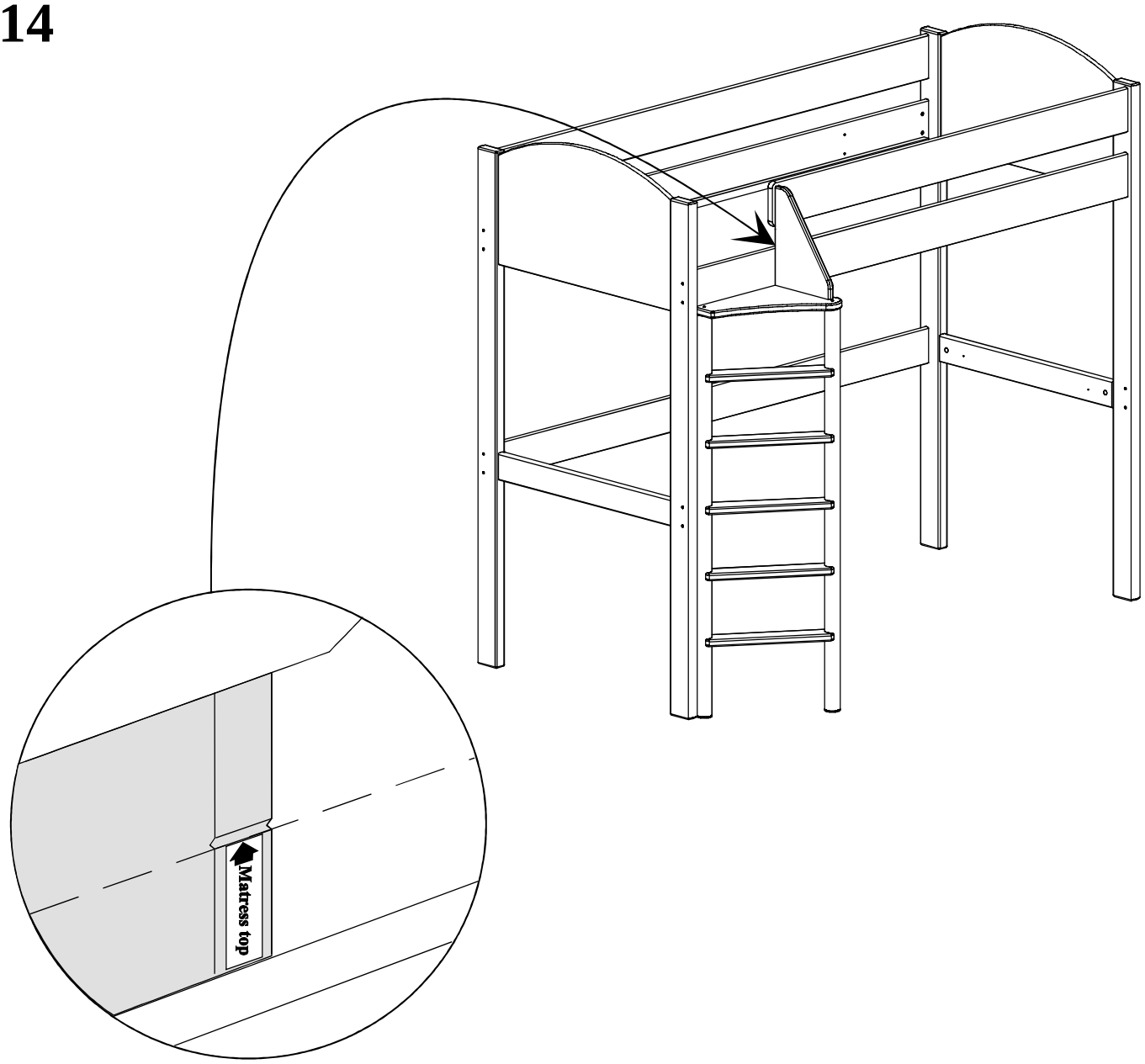

I henhold til Norsk Standard og Europa-norm **NS-EN 747 "Møbler - køyesenger til bruk i boliger",** anbefales det at følgende retningslinjer blir fulgt:
1. STOMPA gjør oppmerksom på markeringslinja på stigesiden.
Toppen på madrassen skal ikke være høyere enn denne markeringslinja.
Det anbefales en madrasstørrelse på 90x200cm.
2. Vær oppmerksom på at barn (under 6) kan falle ut av overkøya.
3. Barn bør ikke leke i overkøya.
4. STOMPA anbefaler at sikkerhetsbrett, stige og andre deler kontrolleres regelmessig.
Dette for å påse at delene er i god stand og at de sitter på plass.
Trekk til skruene om nødvendig.
5. Dersom enkelte deler må byttes ut, bør disse bestilles fra forhandleren.
Kun originale deler skal benyttes.
6. Sengebunnene skal skrues fast.
Sørg for at mellomrommet mellom hver spile ikke er større enn 75 mm.
Minimum3 spiler bør skrues fast.

In compliance with **EN 747-1 1993 "Furniture - Bunk Beds for Domestic use",** please study the following guide lines:
1. Be aware of the mattress line on the ladder side. Please ensure that the mattress does not extend above the mattress line. Mattress of 90x200 cm is recommended.
2. Be aware of the danger of young children (under 6) falling from the upper bunk.
3. Children should be discouraged from playing on the bunk bed.
4. We recommend that a periodic check is made, to ensure that guard rails, ladder and other components are in correct position, that they are in good condition and that the fittings are tight.
5. If replacement parts are required, please order these from your furniture dealer. Substitute parts must not be used.
6. When using a slatted bottom, ensure when securing slats that the gaps between them are no more than 75mm. Each slat must be screwed into place.

Gemäß der **EN 747-1 1993 "Möbel - Etagenbetten für den Wohnbereich",** beachten Sie bitte die folgenden Richtlinien:
1. Bitte beachten Sie die Markierungslinie an der Leiterseite.
Die Matratze soll nicht höher als diese Markierungslinie sein.
Eine Matratze von 90x200 cm wird empfohlen.
2. Beachten Sie die Gefahr dafür, daß kleine Kinder (unter 6 Jahre) vom oberen Bett hinunterstürzen können.
3. Den Kindern sollten vom Spielen im Hochbett abgeraten werden.
4. Wir empfehlen Ihnen eine zeitweise Kontrolle durchzuführen um zu sichern, daß die Absturz-sicherungen, die Leiter und andere Teile sorgfältig festgeschraubt sind.
5. Wenn Ersatzteile benötigt werden, bitte bestellen Sie diese bei Ihrem Möbelhändler. Nur Originale Teile sind zu vervenden.
6. Wenn einen Lattenrost benutzt wird, bitte sorgen Sie dafür, daß alle Latten, in einem Abstand von höchstens 75 mm voneinander, festgeschraubt werden.

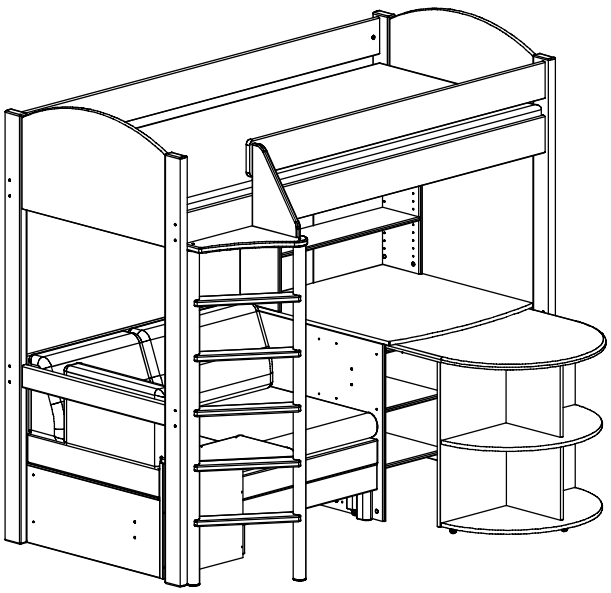

Art.nr. 104

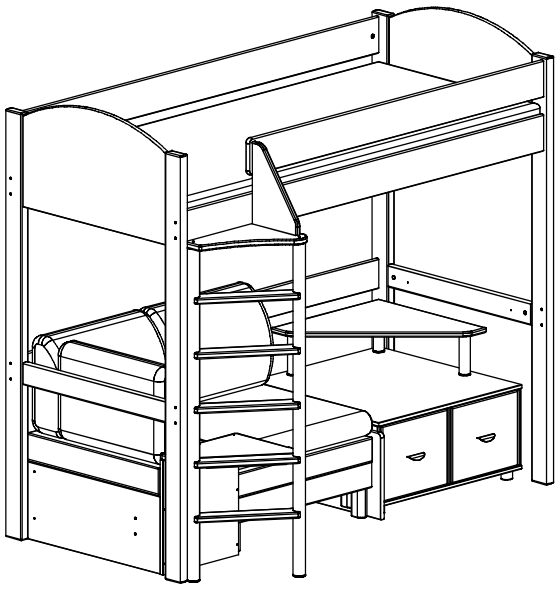

Art.nr. 105

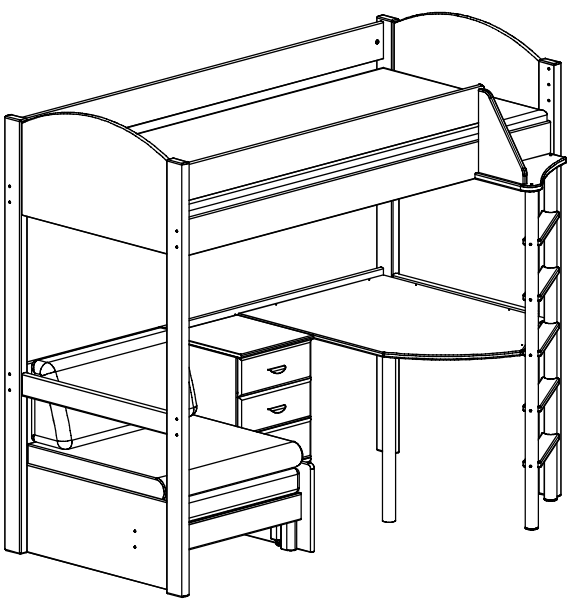

Art.nr. 121

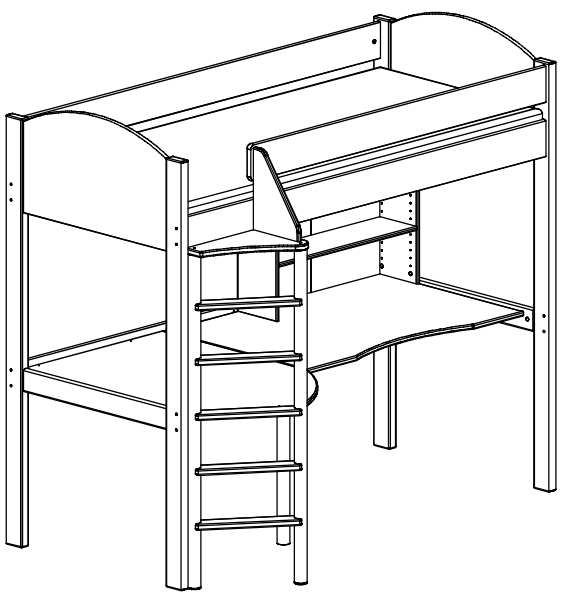

Art.nr. 112

8/8

Stompa®

www.stompa.com

Art.nr. A015

(N) Metallstige
(GB) Metal ladder
(D) Metall-Leiter

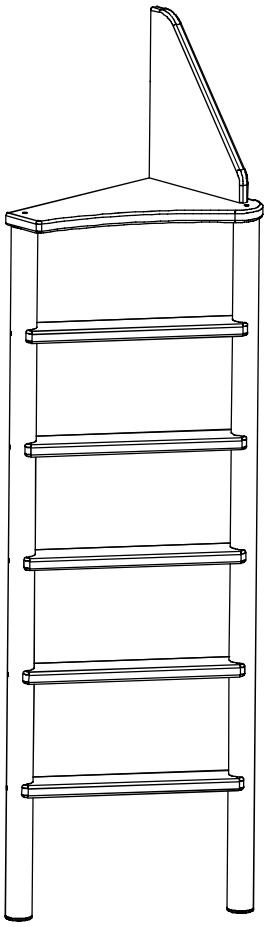

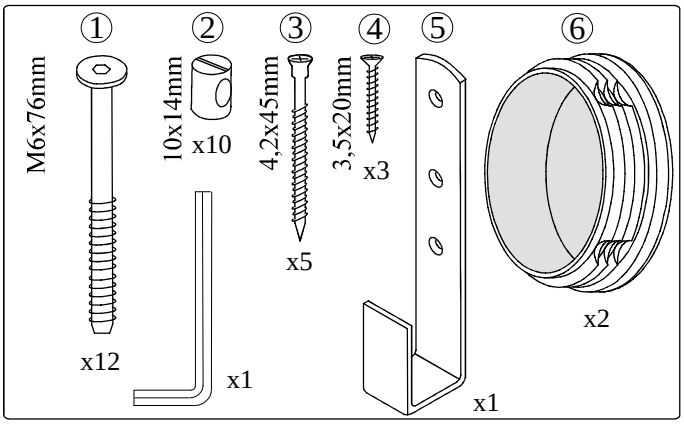

Du trenger også et stjerne-skrujern.
You also need a crosshead screwdriver.
Zusätzlich brauchen Sie einen Kreuzschraubenzieher.

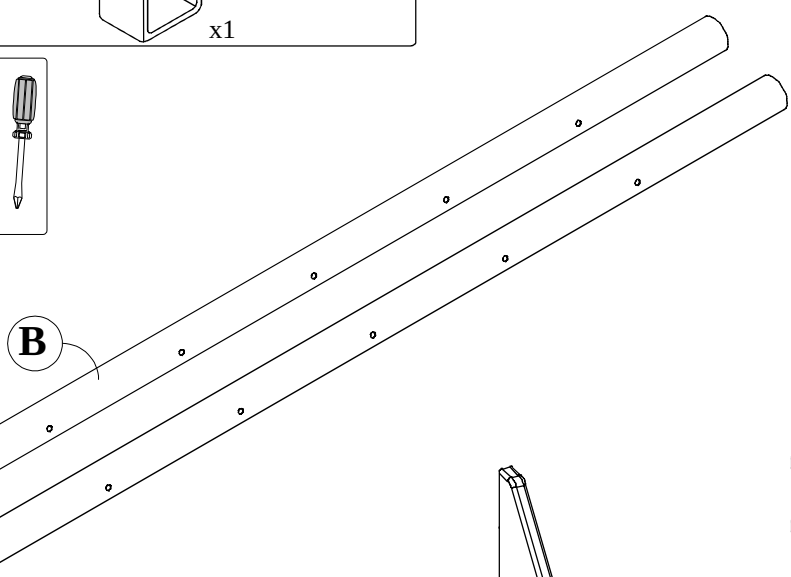

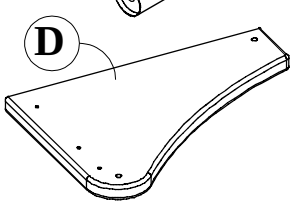

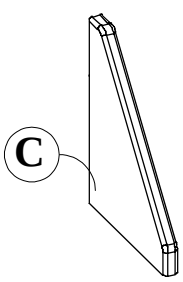

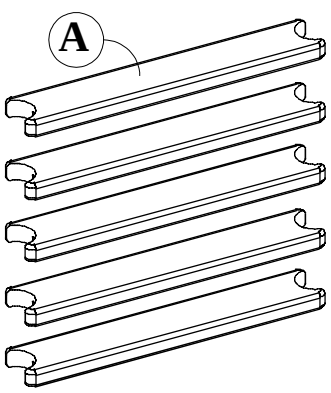

United Kingdom:
If anything should fail to give satisfaction, please contact your STOMPA stockist with details of any problems with the product. Please quote Art number & serial number on any correnspondence.

Stompa UK
The Old Mill House
Dockfield Road, Shipley
West Yorkshire, BD17 7AE
E-mail: stompa@stompa.co.uk
www.stompa.co.uk

Cosybunks | www.cosybunks.co.uk | info@cosybunks.co.uk | Need help? www.cosybunks.co.uk/pages/contact-us

1

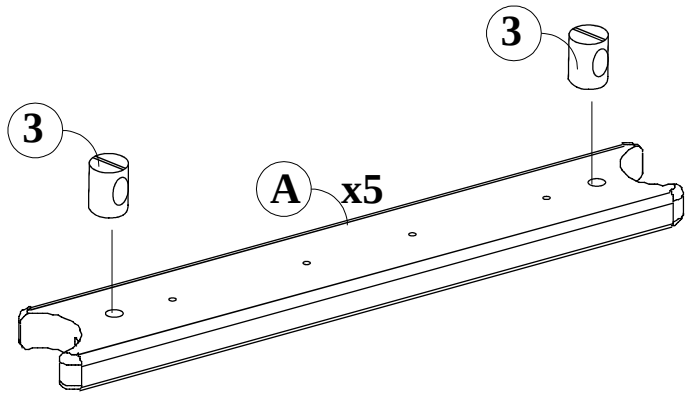

2

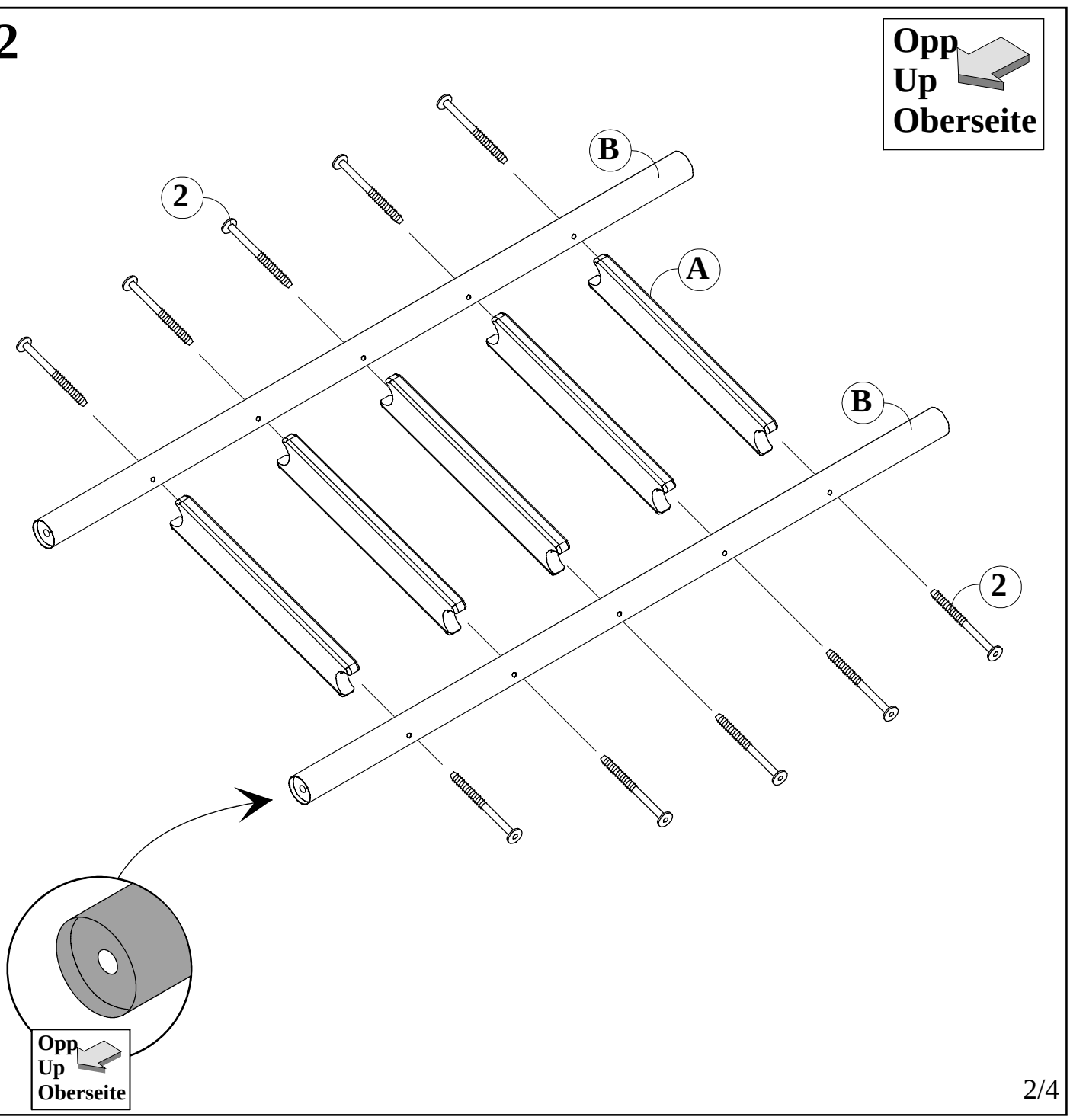

2/4

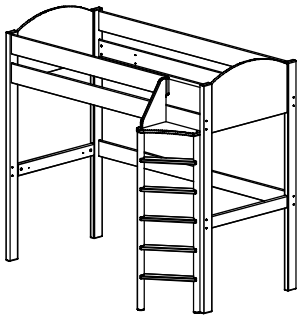

Stige til høyre
Ladder Right
Leiter rechts

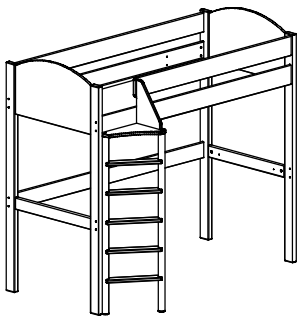

Stige til venstre
Ladder Left
Leiter links

3a

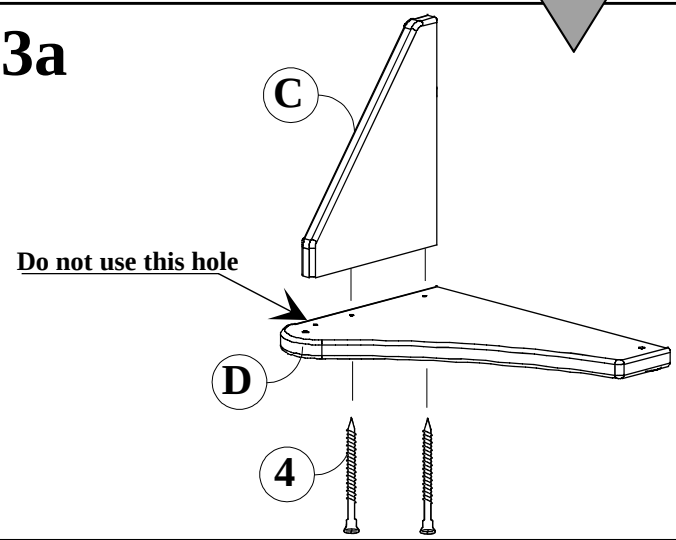

3b

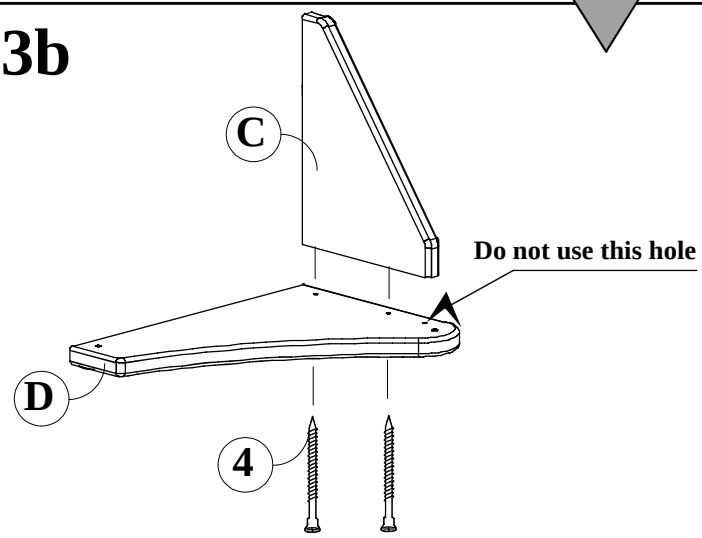

4a

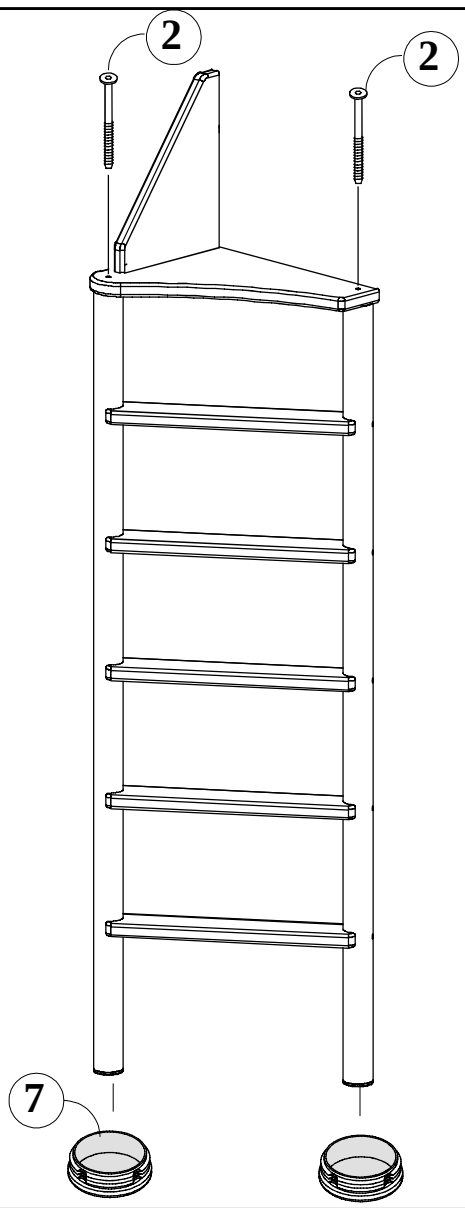

4b

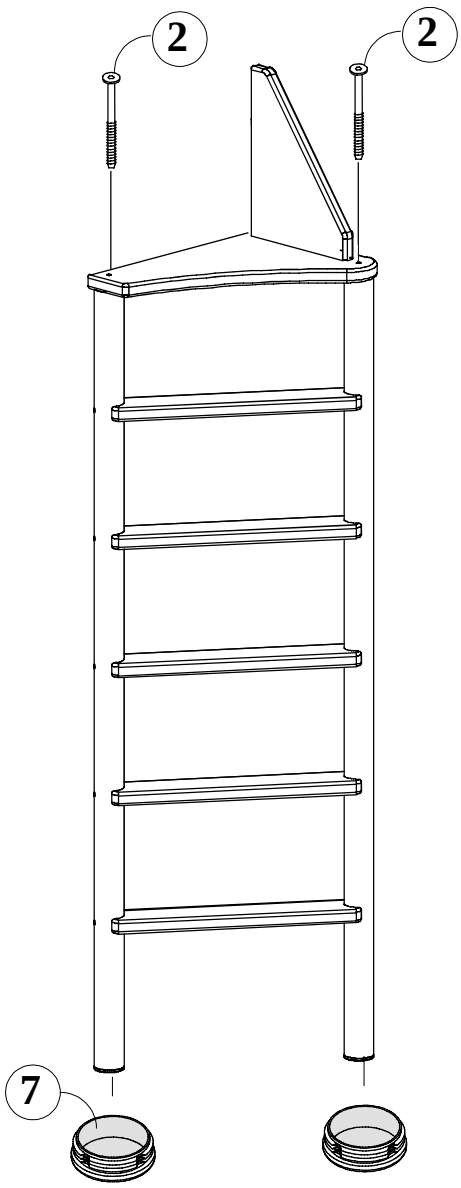

3/4

5

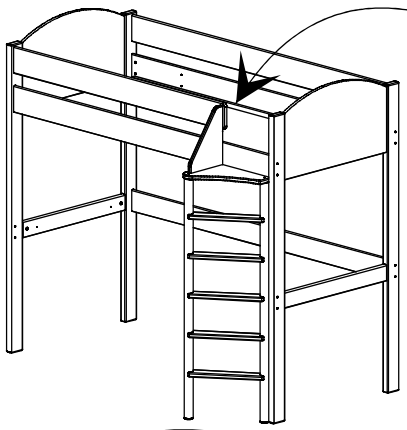

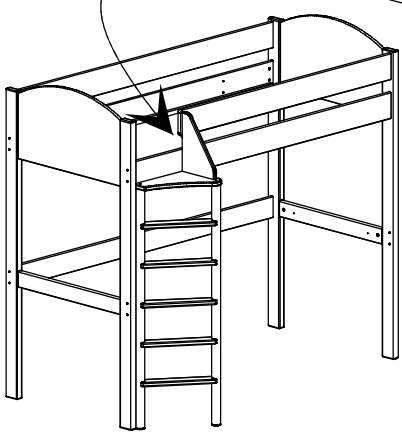

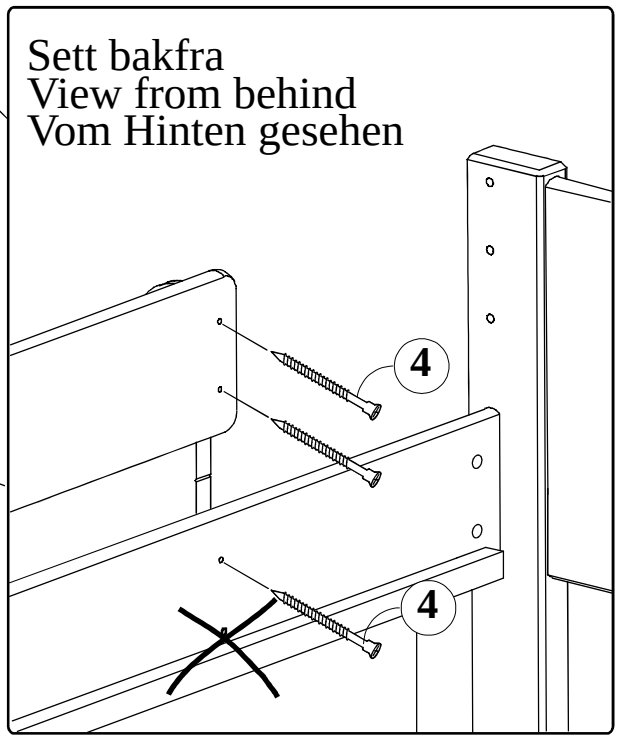
Sett bakfra
View from behind
Vom Hinten gesehen
4
4

6

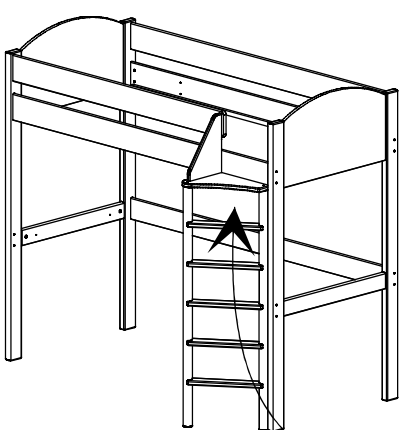

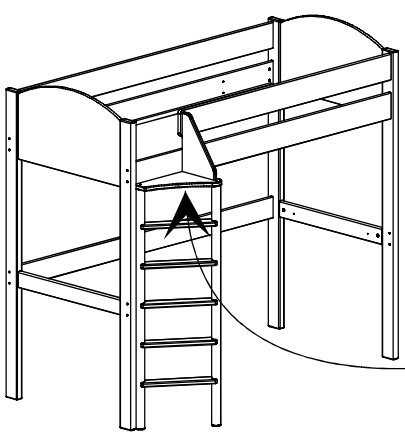

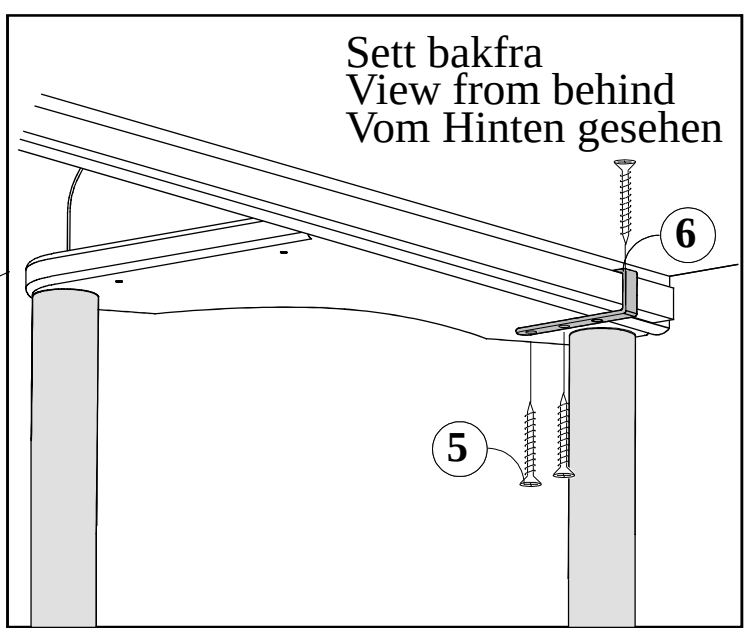
Sett bakfra
View from behind
Vom Hinten gesehen
6
5

4/4

Stompa®

www.stompa.com

Art.nr. A018

(N) Sofa
(GB) Sofabed
(D) Sessel

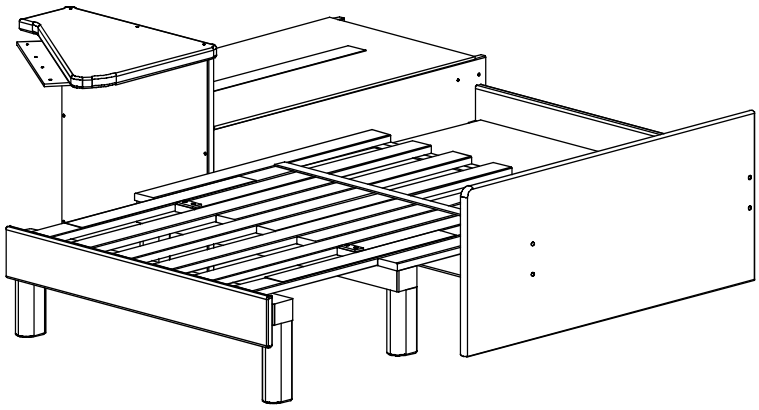

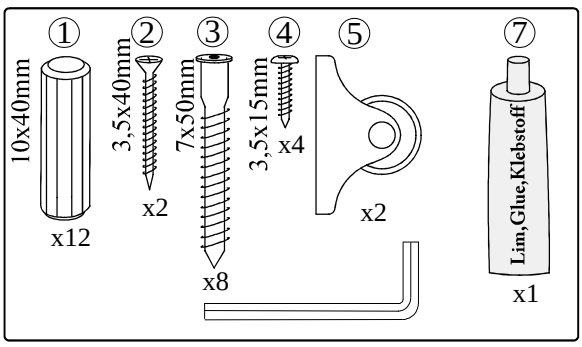

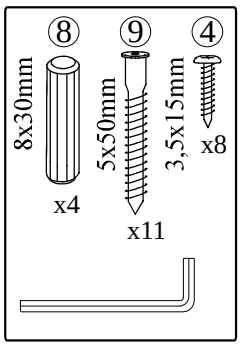

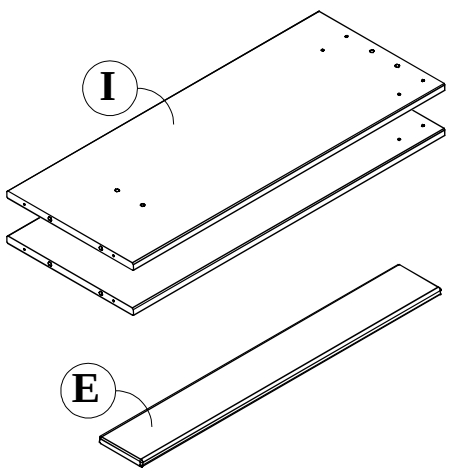

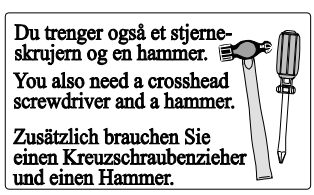

United Kingdom:

If anything should fail to give satisfaction, please contact your STOMPA stockist with details of any problems with the product. Please quote Art number & serial number on any correnspondence.

Stompa UK
The Old Mill House
Dockfield Road, Shipley
West Yorkshire, BD17 7AE
E-mail: stompa@stompa.co.uk
www.stompa.co.uk

Cosybunks | www.cosybunks.co.uk | info@cosybunks.co.uk | Need help? www.cosybunks.co.uk/pages/contact-us

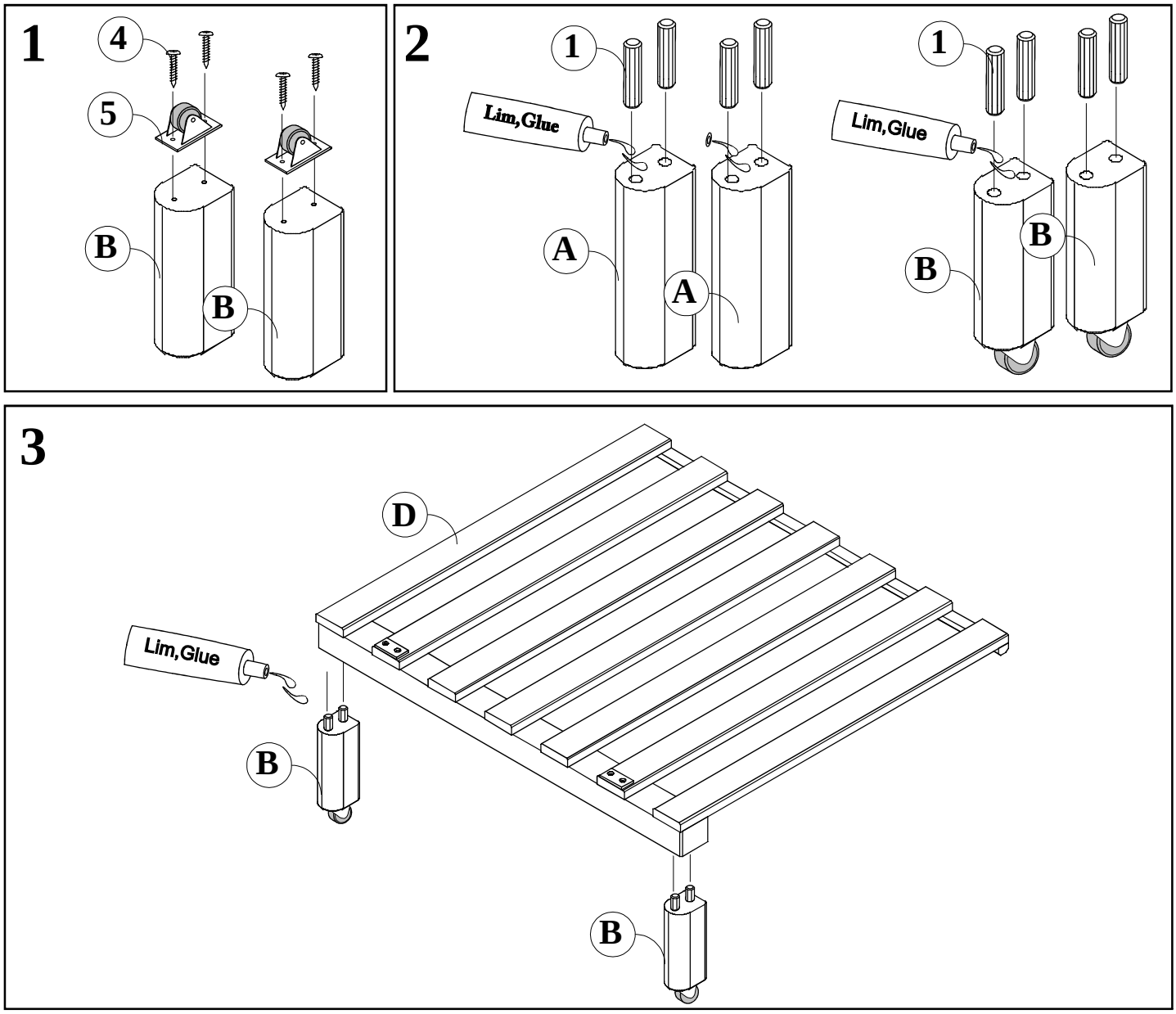
1
4
5
B
B
2
1
Lim,Glue
A
A
1
Lim,Glue
B
B
3
D
Lim,Glue
B
B
4
C
A
E
1
Lim,Glue
Lim,Glue
A

5

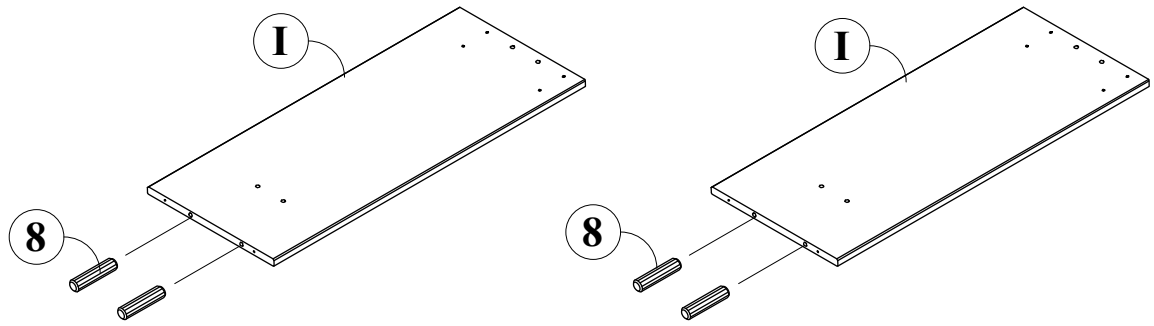

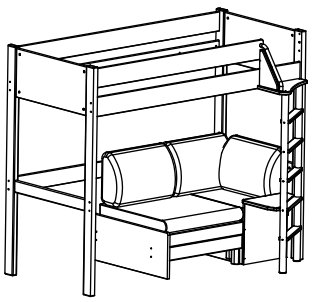

Sofa til høyre
Sofabed Right
Sessel rechts

6a

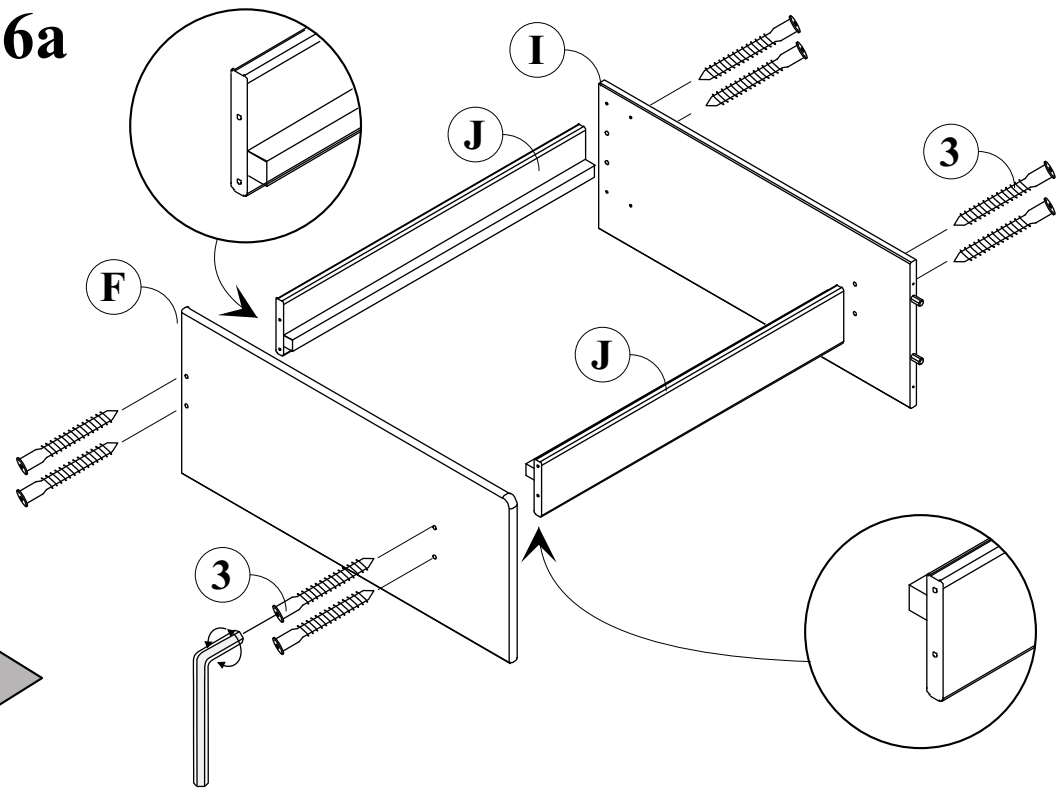

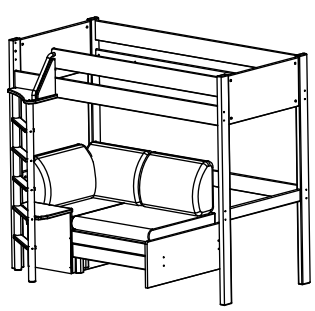

Sofa til venstre
Sofabed Left
Sessel links

6b

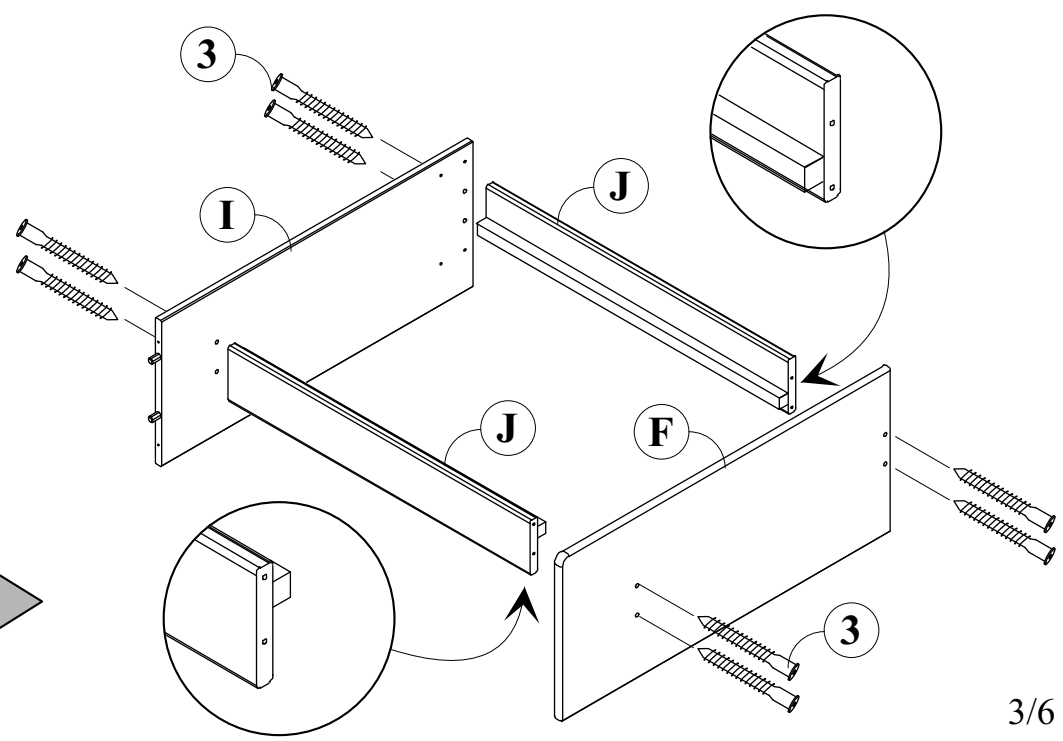

3/6

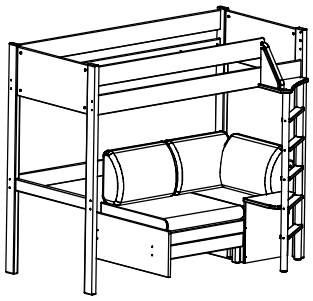

Sofa til høyre
Sofabed Right
Sessel rechts

7a

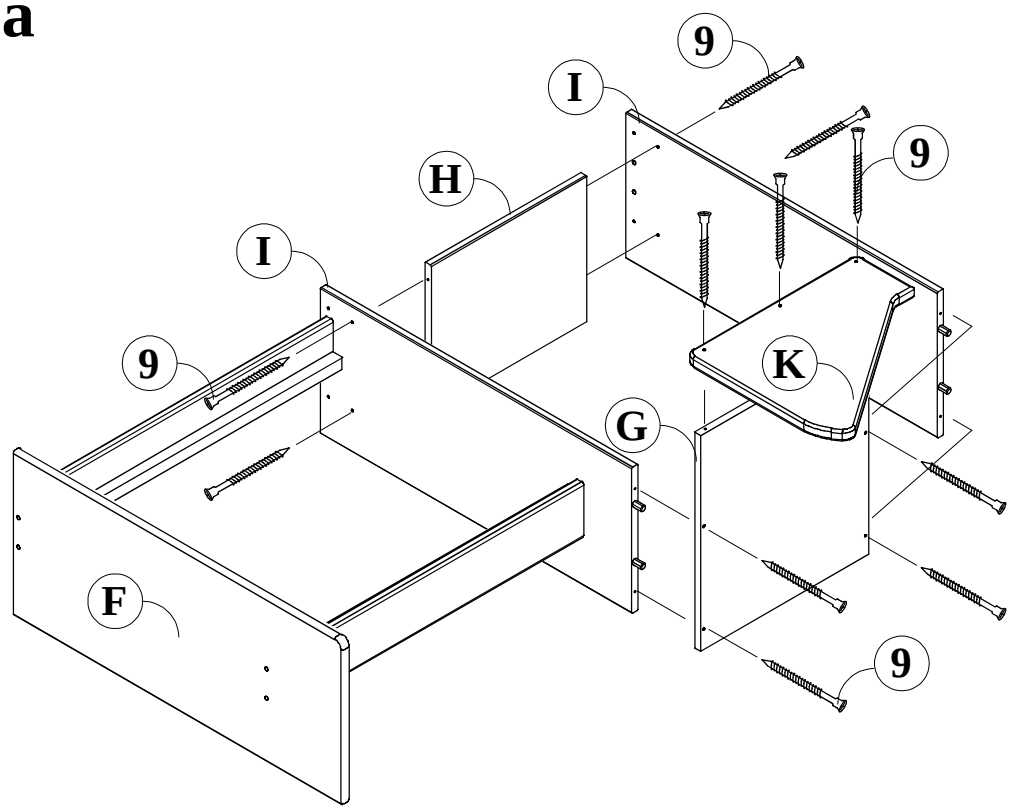

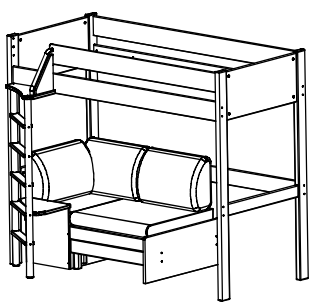

Sofa til venstre
Sofabed Left
Sessel links

7b

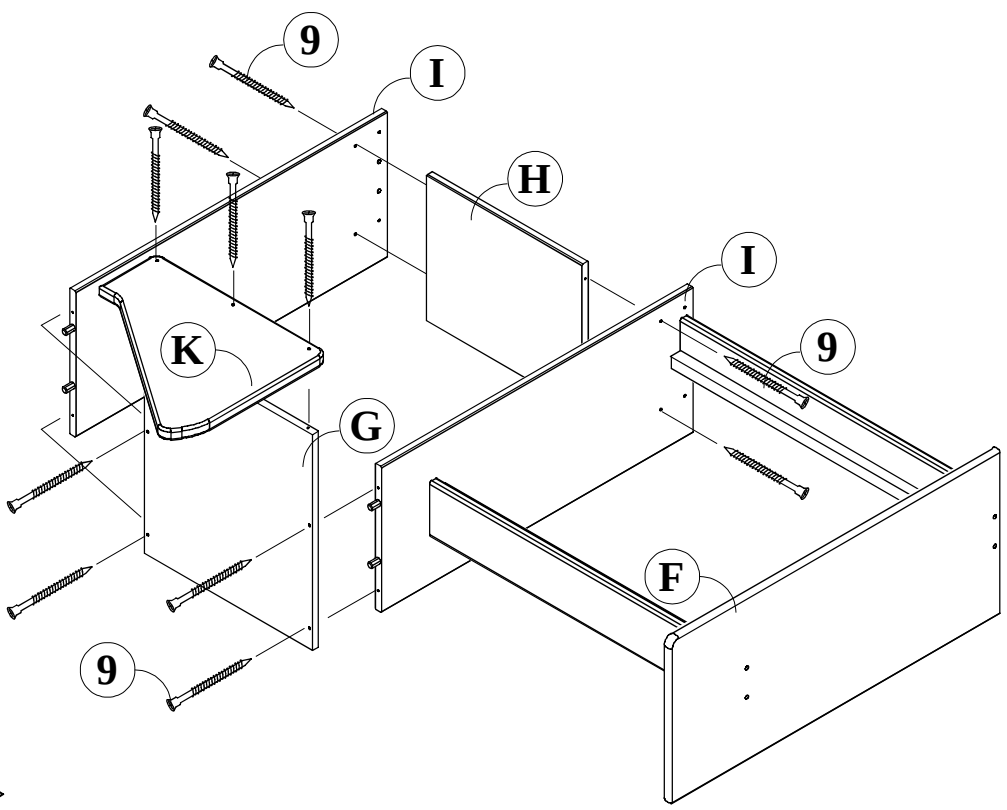

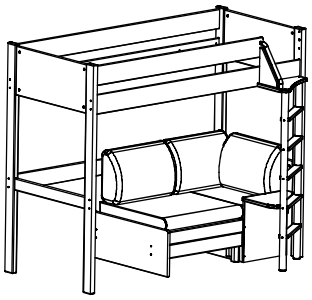

Sofa til høyre
Sofabed Right
Sessel rechts

8a

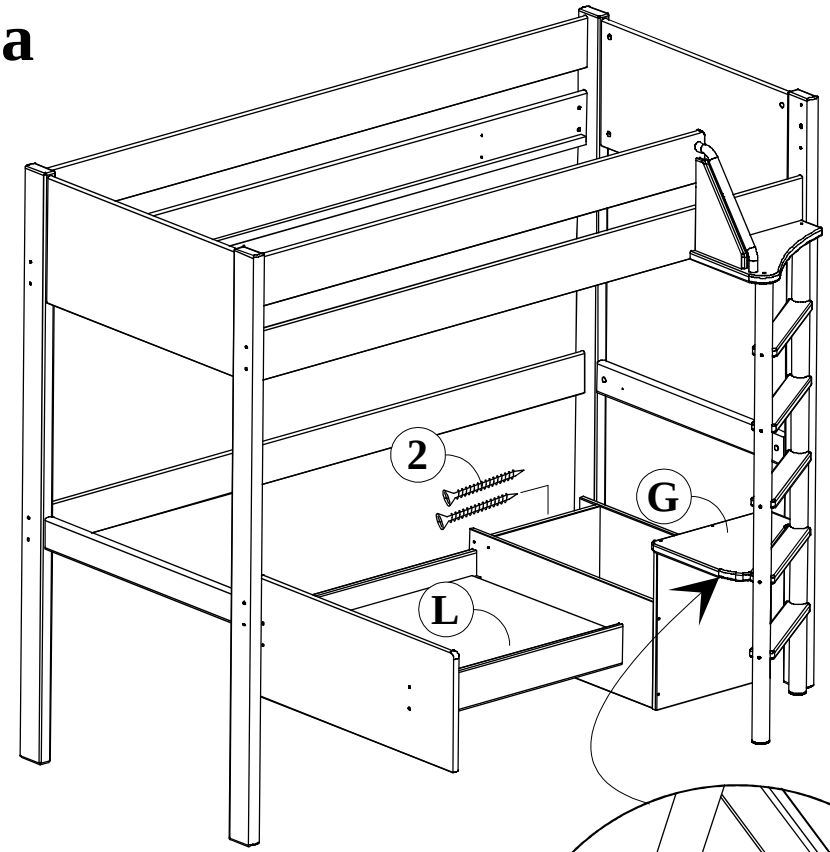

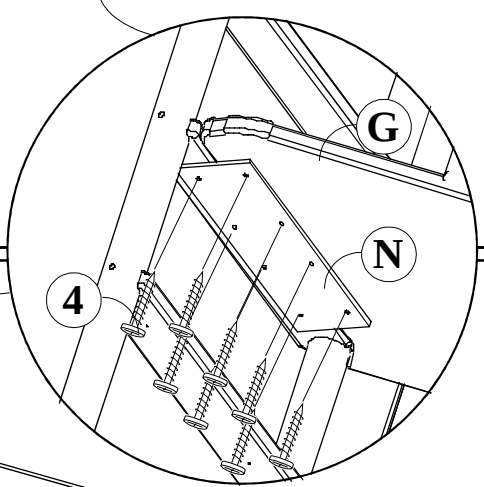

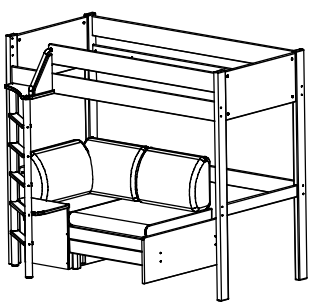

Sofa til venstre
Sofabed Left
Sessel links

8b

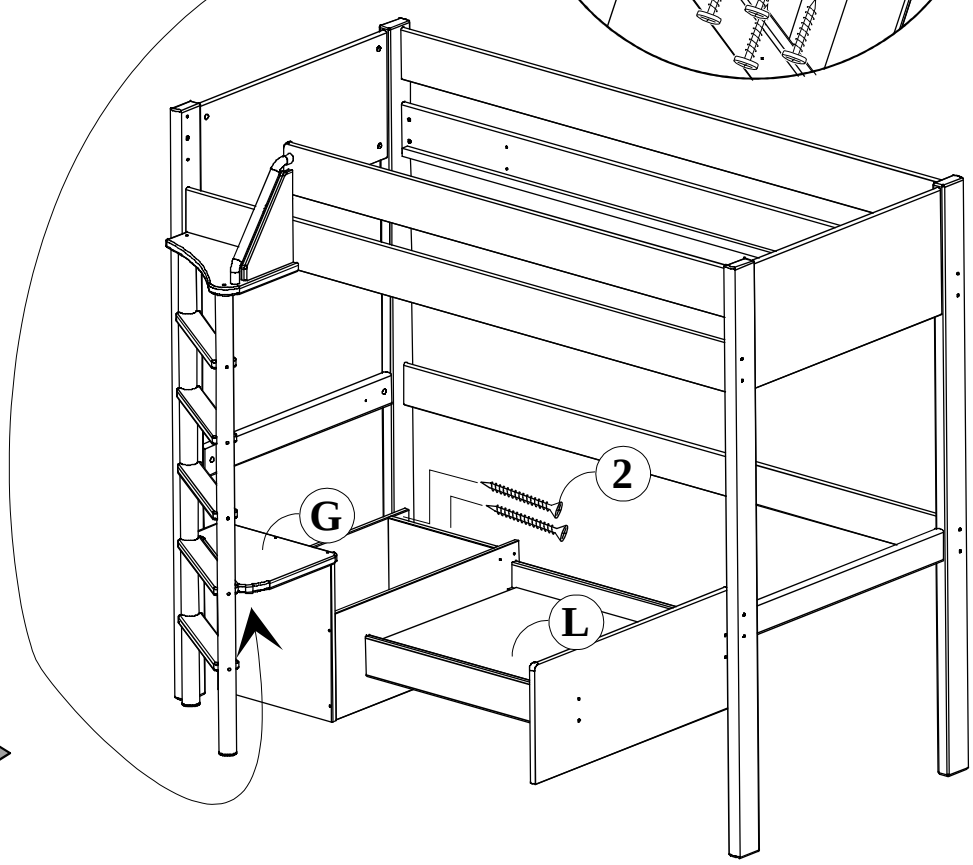

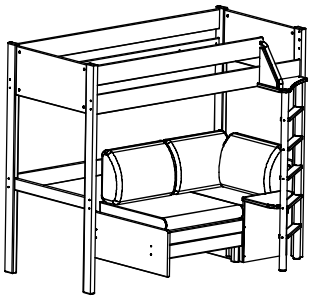

Sofa til høyre
Sofabed Right
Sessel rechts

9a

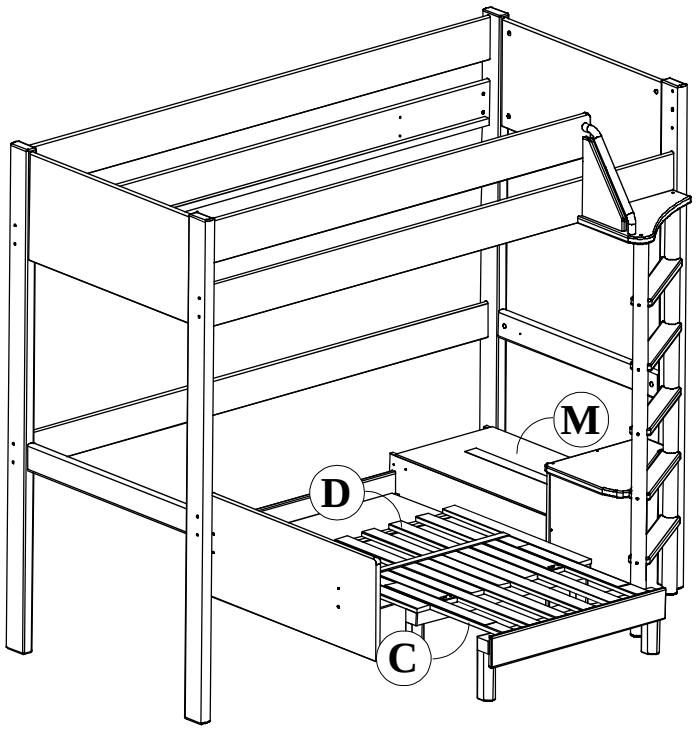

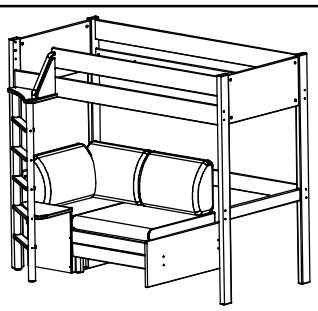

Sofa til venstre
Sofabed Left
Sessel links

9b

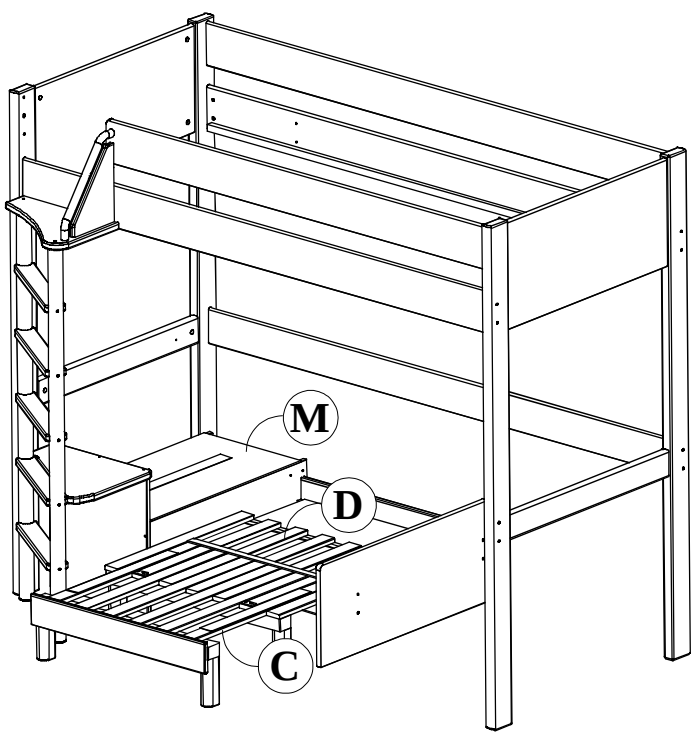

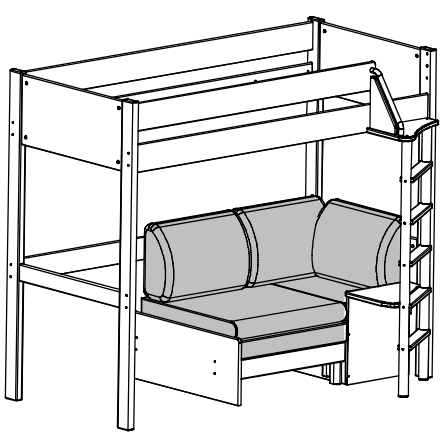

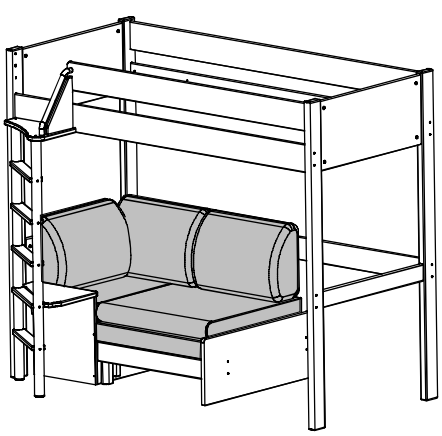

6/6

Stompa®

WWW.STOMPA.COM

Art.nr. 188

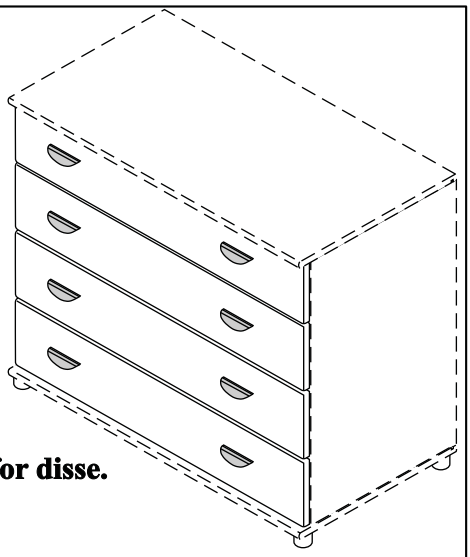

(N) Skuffe

(GB) Drawer

(D) Schublade

Skuffen passer på flere av Stompas reoler, og vi viser derfor til anvisning for disse. Tegningene kan derfor avvike noe fra den reolen du har.

The drawer will fit on several units of Stompa´s shelving system. Please see separate assembly instructions. The drawings might differ a bit from the shelf unit you have.

Die Schublade passen zu mehreren von unseren Regalen. Wir verweisen auf eigene Anleitung dafür. Die Zeichnungen können deswegen ein bisschen abweichen von dem Regal, das Sie aufbauen werden.

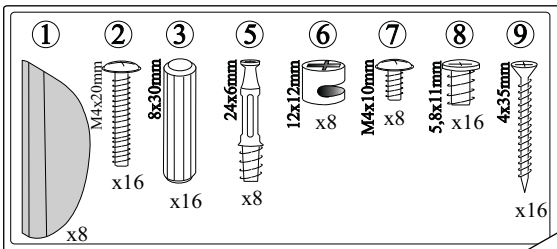



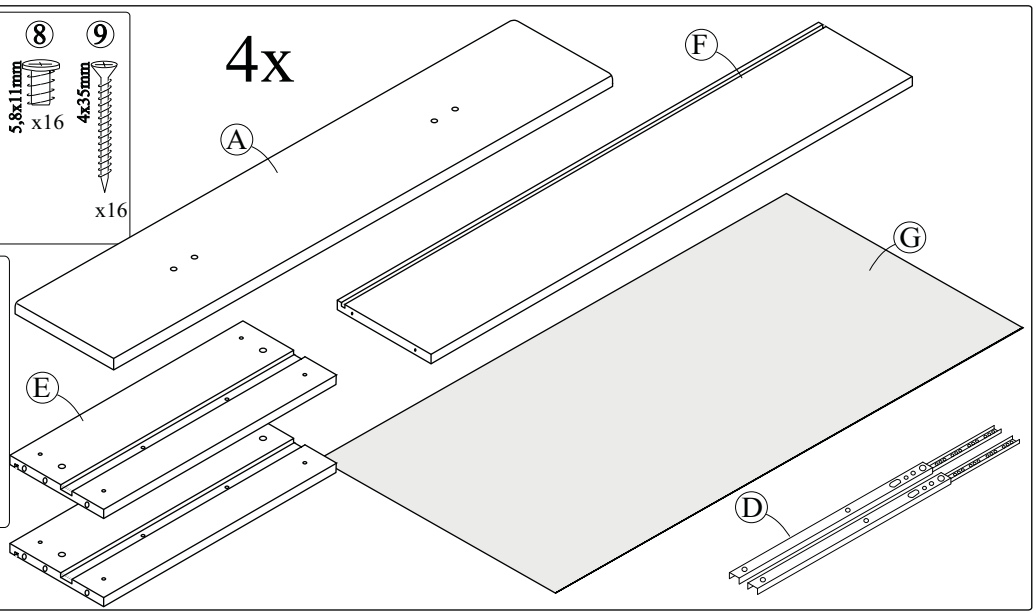

1

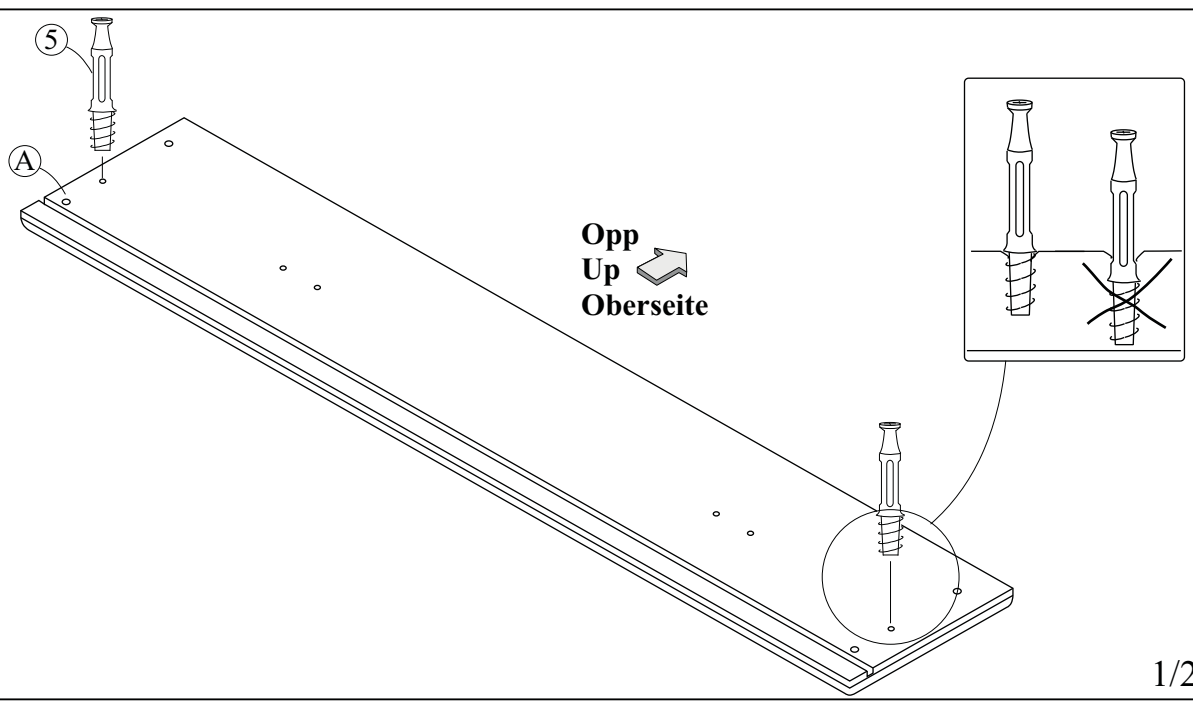

1/2

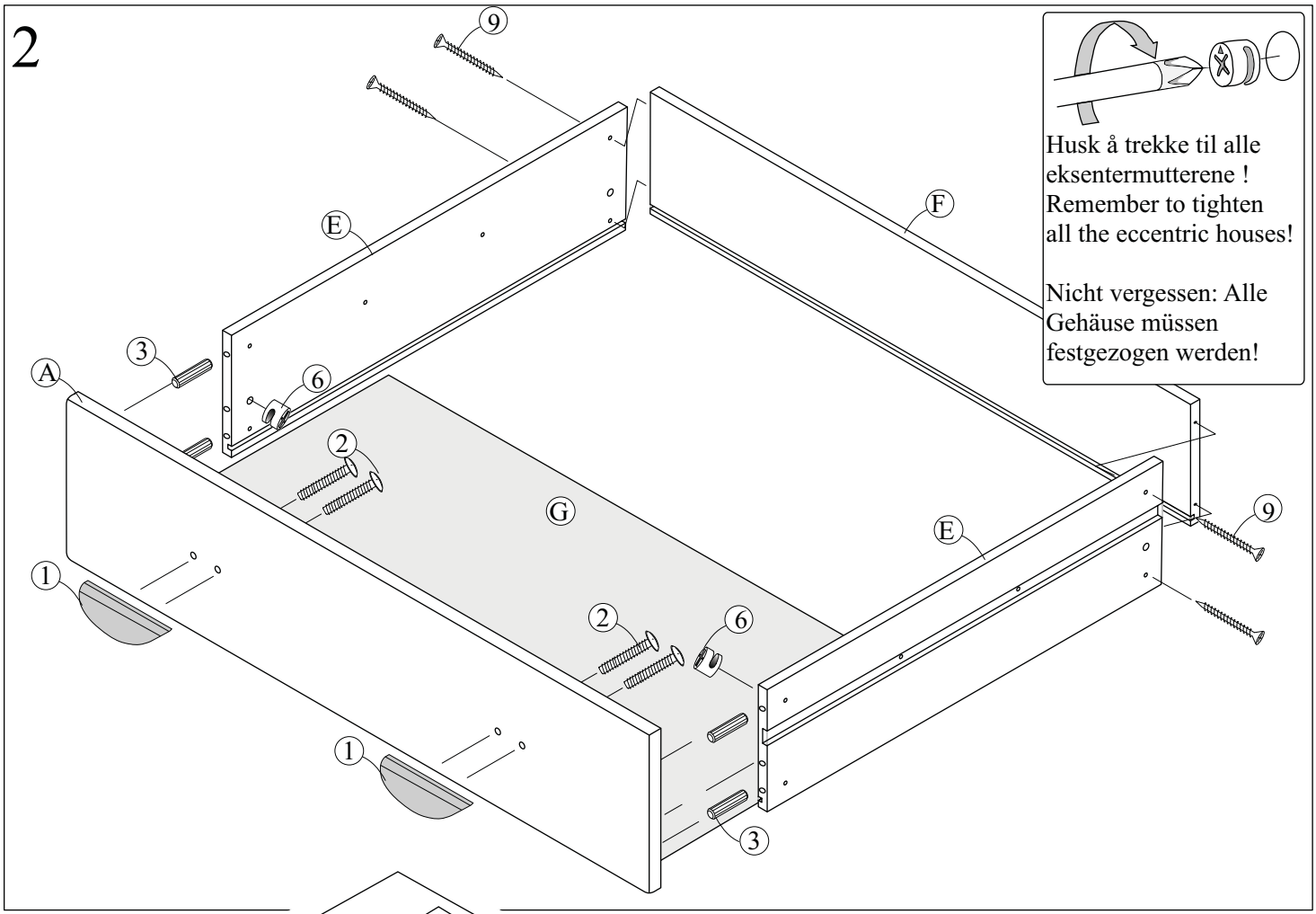

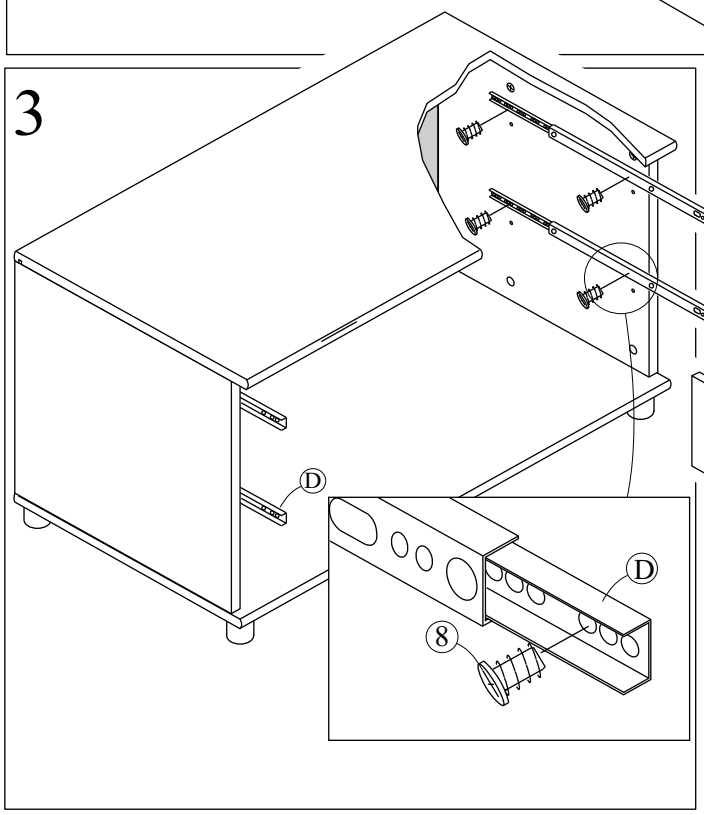

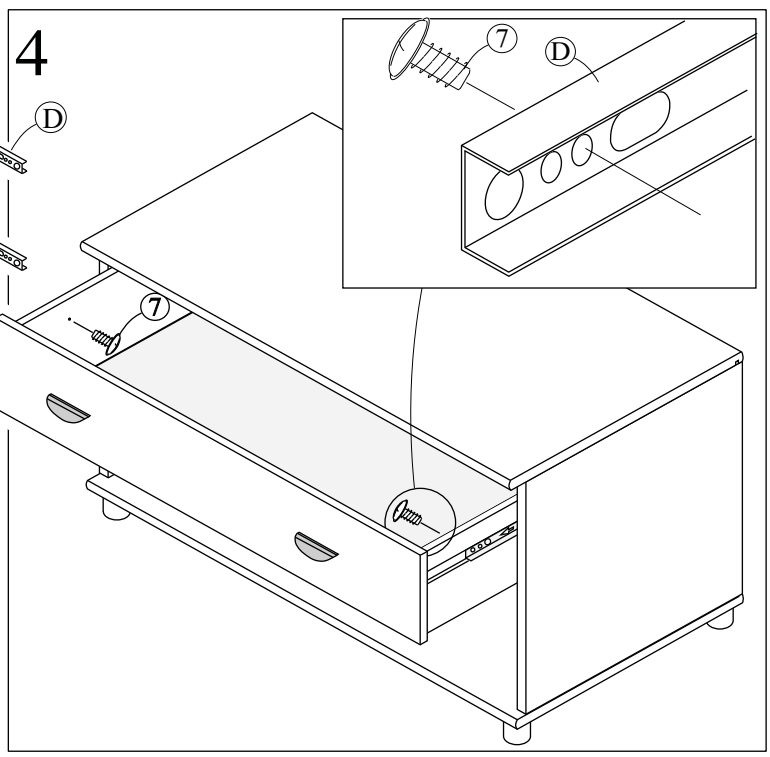

United Kingdom:

If anything should fail to give satisfaction, please contact your STOMPA stockist with details of any problems with the product. Please quote Art number & serial number on any correnspondence.

Stompa UK
The Old Mill House
Dockfield Road, Shipley
West Yorkshire, BD17 7AE
E-mail: stompa@stompa.co.uk
www.stompa.co.uk

Stompa®

WWW.STOMPA.COM

Art.nr. 183

(N) Reol

(GB) Storage unit

(D) Regal mit Kreuzböden

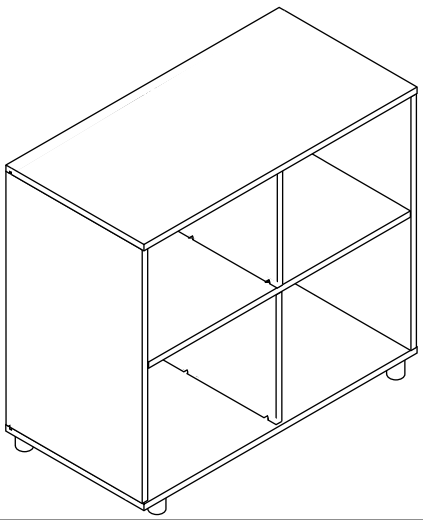

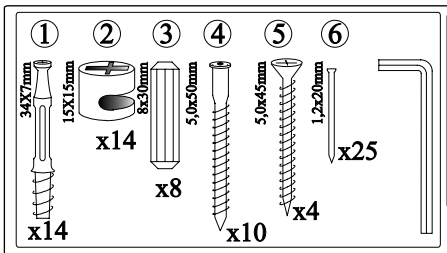

Du trenger også et stjerne-skrujern og en hammer.
You also need a crosshead screwdriver and a hammer.
Zusätzlich brauchen Sie einen Kreuzschraubenzieher und einen Hammer.

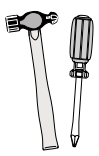

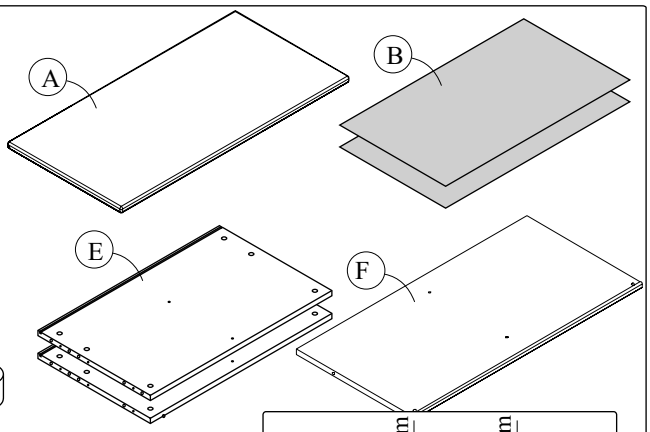

1

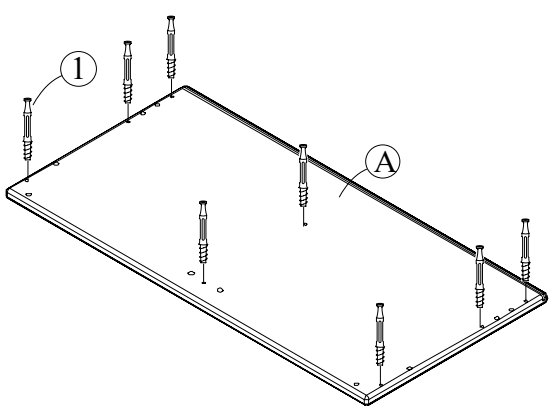

2

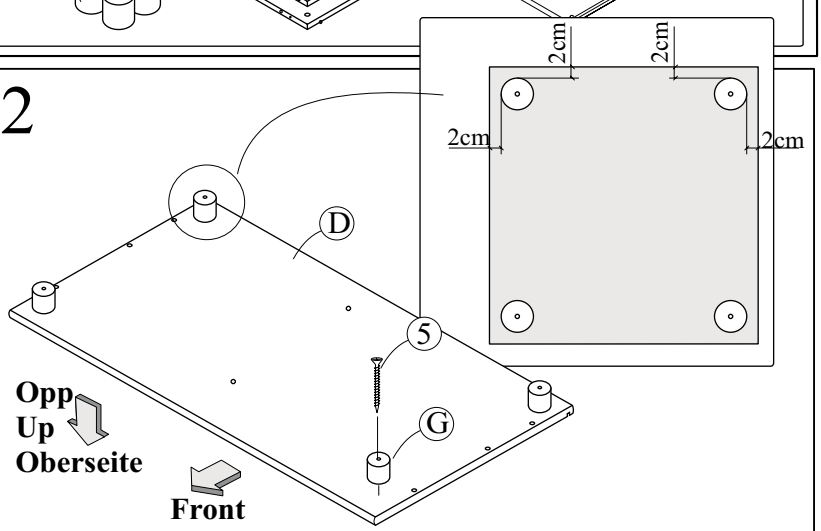

3

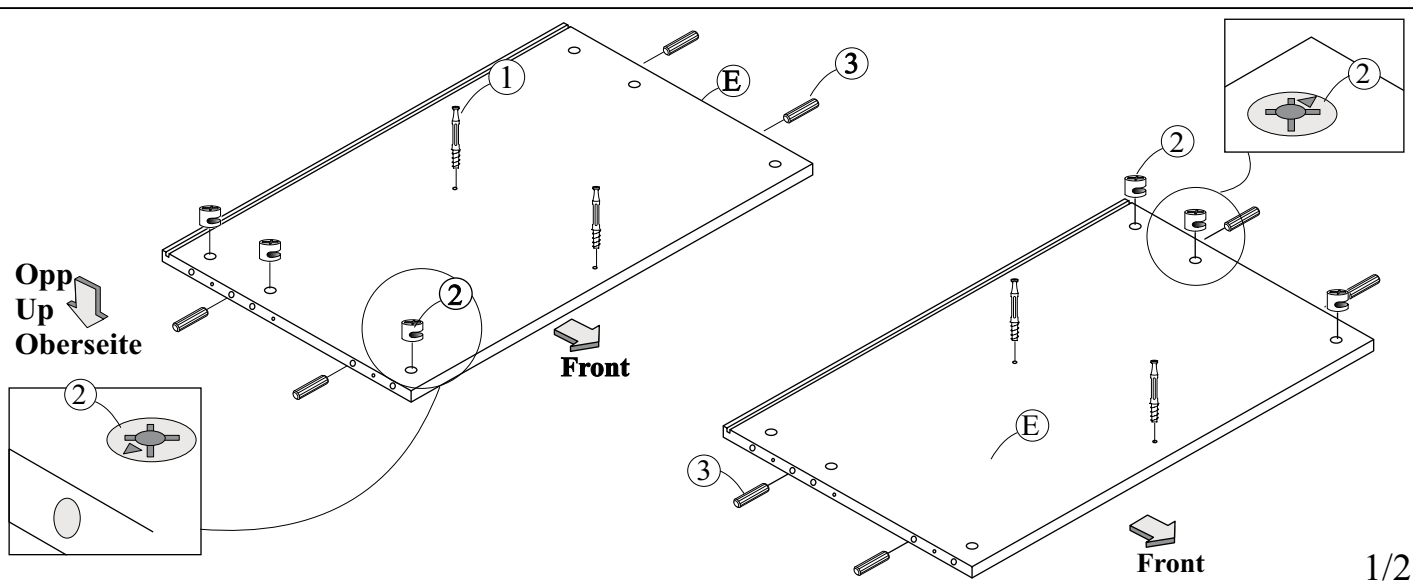

1/2

4

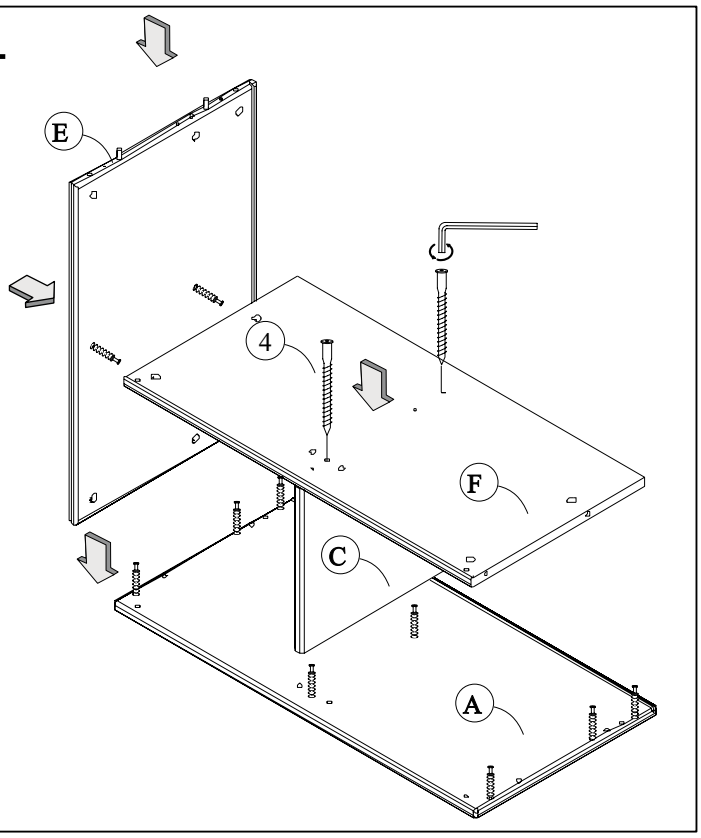

5

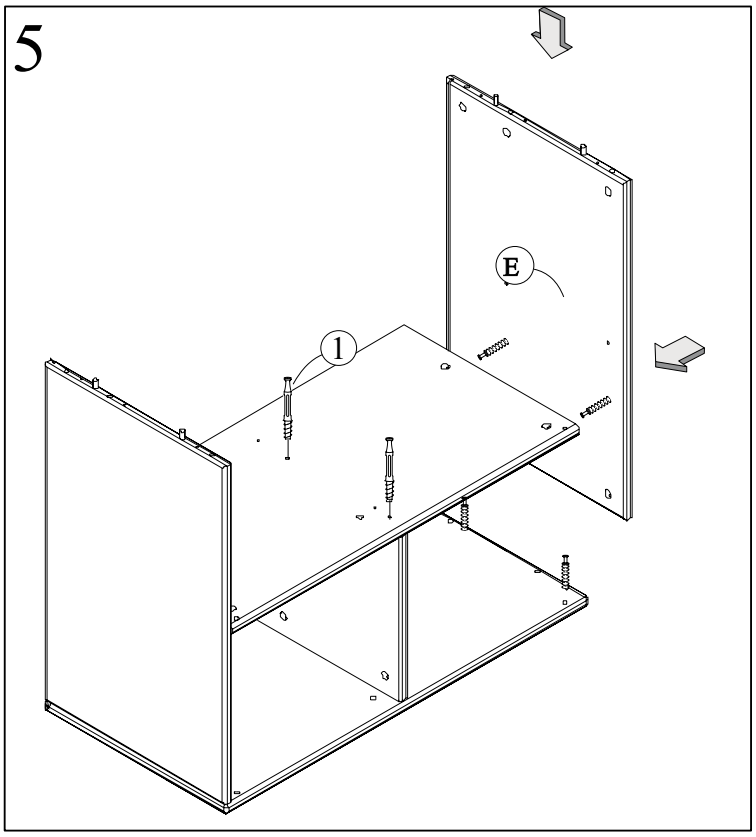

6

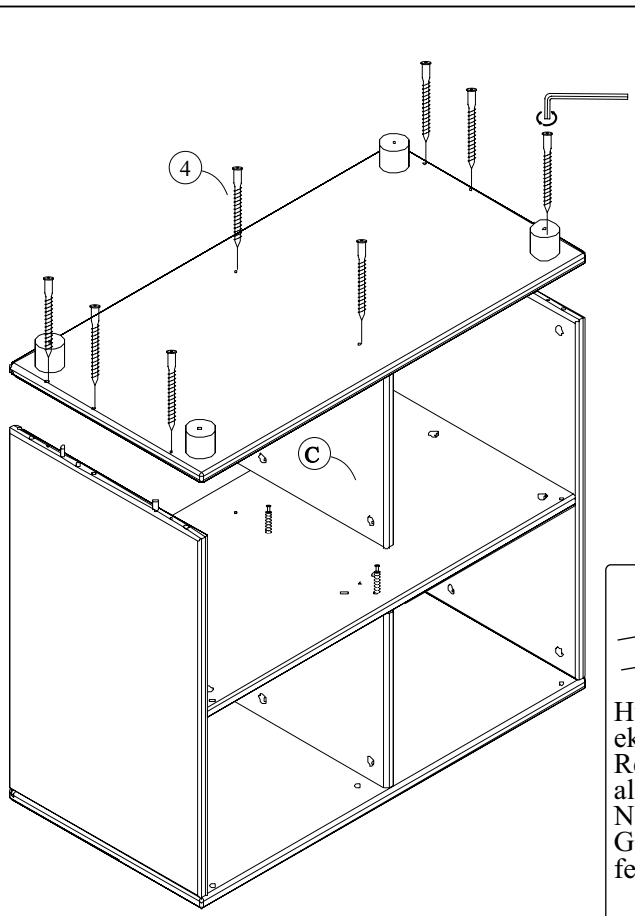

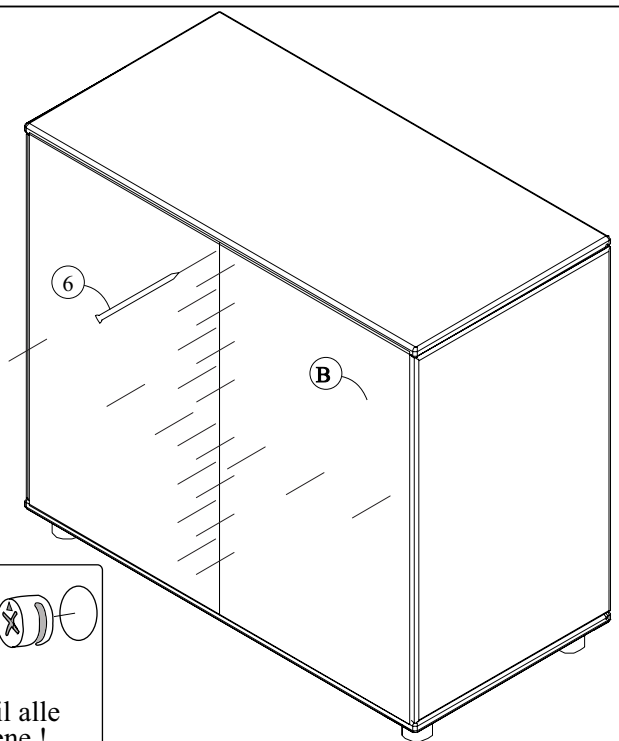

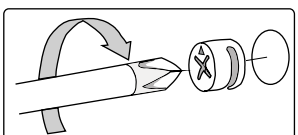

Husk å trekke til alle eksentermutterene !
Remember to tighten all the eccentric houses!
Nicht vergessen: Alle Gehäuse müssen festgezogen werden!

United Kingdom:

If anything should fail to give satisfaction, please contact your STOMPA stockist with details of any problems with the product. Please quote Art number & serial number on any correnspondence.

Stompa UK
The Old Mill House
Dockfield Road, Shipley
West Yorkshire, BD17 7AE
E-mail: stompa@stompa.co.uk
www.stompa.co.uk