Assembly instructions

Estella Gaming High Sleeper Loft Bed

The manufacturer's instructions follow unchanged, including all safety warnings, age and weight limits and part codes. Please read them in full before you start, and keep them for future reference.

View this product: www.cosybunks.co.uk/products/estella-gaming-high-sleeper-with-integrated-desk-grey

Need help with assembly?

Scan to contact us

info@cosybunks.co.uk
www.cosybunks.co.uk

Sold by Cosybunks (retailer). Instructions supplied by the manufacturer and reproduced unchanged.

IMPORTANT - READ CAREFULLY - KEEP FOR FUTURE REFERENCE

a) **WARNING** Raised beds and the upper bed in a bunk bed assembly are not good for children under 6 years old because of the risk of injury from falling from such beds,

b) **WARNING** If the raised and bunk beds are not used correctly, they can present a serious risk of injury from strangulation. Never attach or suspend things from the upper bunk bed that are not going to be used with that bed.
Such things include - but are not limited to - cords, string, sashes, hooks, belts and bags.

c) **WARNING** Children can find themselves trapped between the bed and wall, or inclined roof wall, ceiling, adjacent pieces of furniture (such as cupboards) or other items.
To avoid any risk of serious injury, the distance between the upper safety barrier and surrounding items should not exceed 75 mm - or the distance should be greater than 230 mm.

d) **WARNING** Do not use the upper bunk bed or a raised bed if a part of the structure is missing or broken. Spare parts should be requested from the manufacturer or shop.

e) It is essential that the manufacturer's instructions on assembly and use are followed.

f) The recommended size of the mattress to be used with the bed is 1900mm x 900mm, Maximum mattress thickness: 158mm,

g) Mattresses must be aired to maintain a low humidity and to stop moisture building up in the bed and its surroundings.

k) The fastenings put in place on assembly should all be properly tightened and regularly checked. Retighten the fastenings as necessary.

l) This complies with the requirements of the European Safety Standard NF EN 747+A1: 2015.

m) The presence of a night light could give more safety for a child sleeping in an upper bed.

NR100-103/119

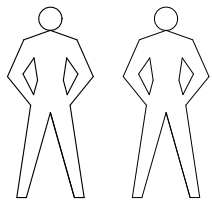

60 min

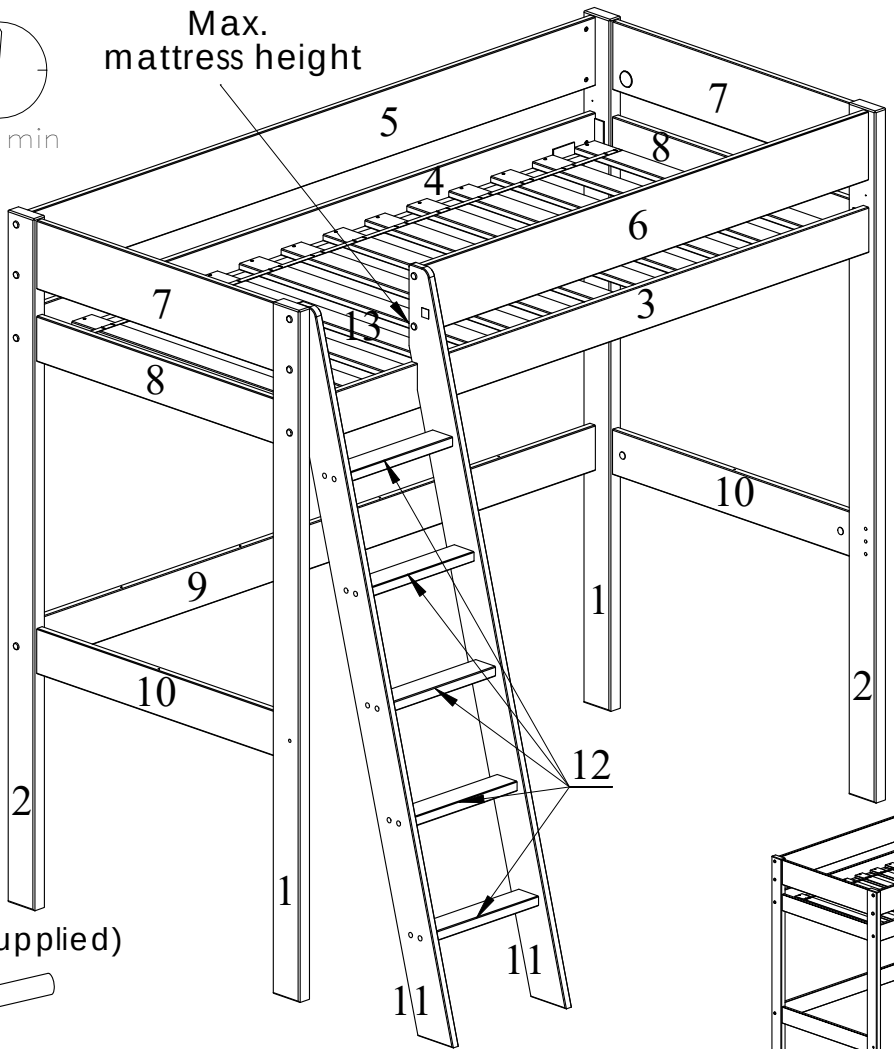

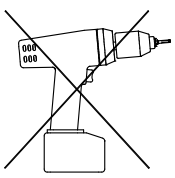

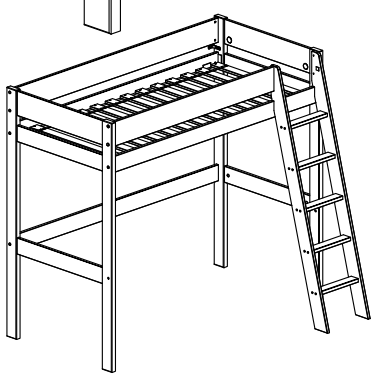

Tools needed (not supplied)

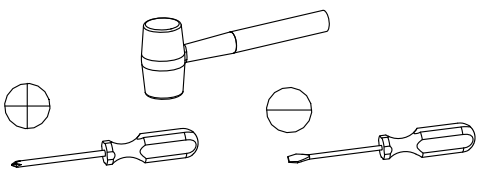

Ladder can be fitted
right or left side.

A		8x40	x42
B		7x34	x4
C		15x12	x4
D		D35	x4
E		7x60	x4
F	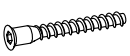	7x50	x20
G	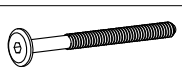	M6x75	x10
M		M6x55	x4
Q		M6x15x15	x2
H		D6x10x13	x12
J	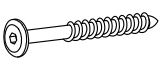	6,3x70	x2
K		55/12,5x5	x2

L		3,5x40	x28
N		D35x12	x4
P		D20	x4
R		D4x13	x20
S		D8x13	x8
T		D15x18	x18
Y		71x30x3	x2
X	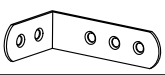	20x42x70	x2
Z		4x30	x4
W		4mm	x2
	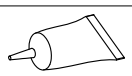	GLUE	x1

1

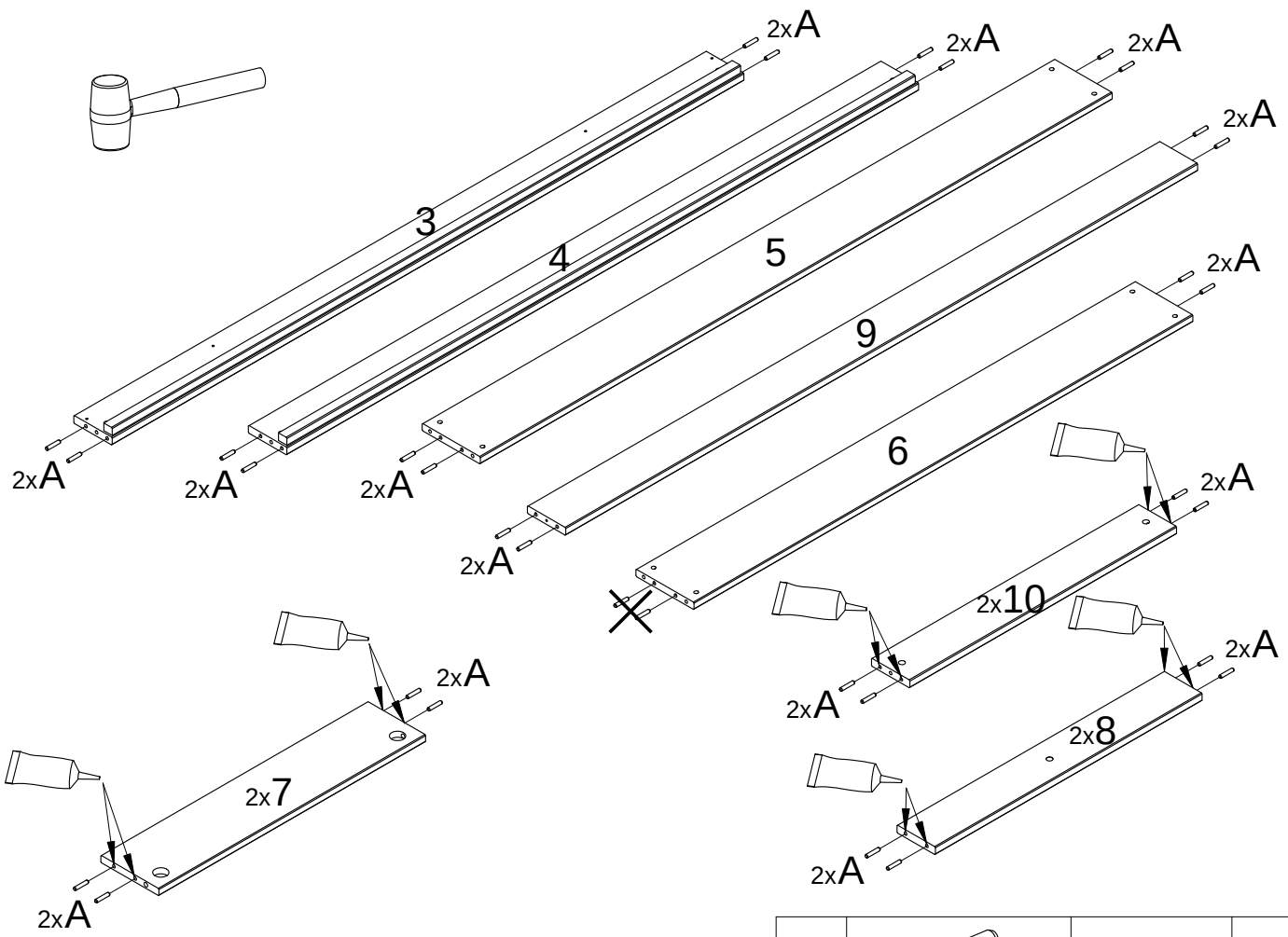

A		8x40	x42

2

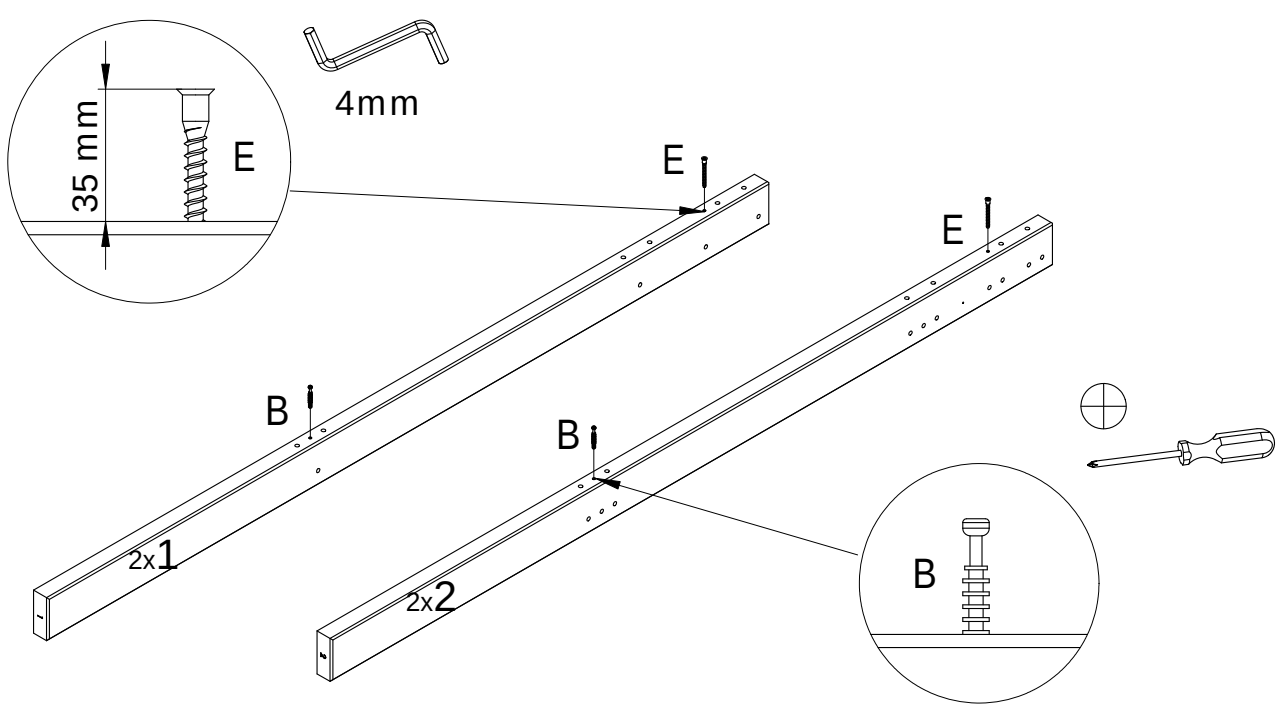

E		7x60	x4
B		7x34	x4

3

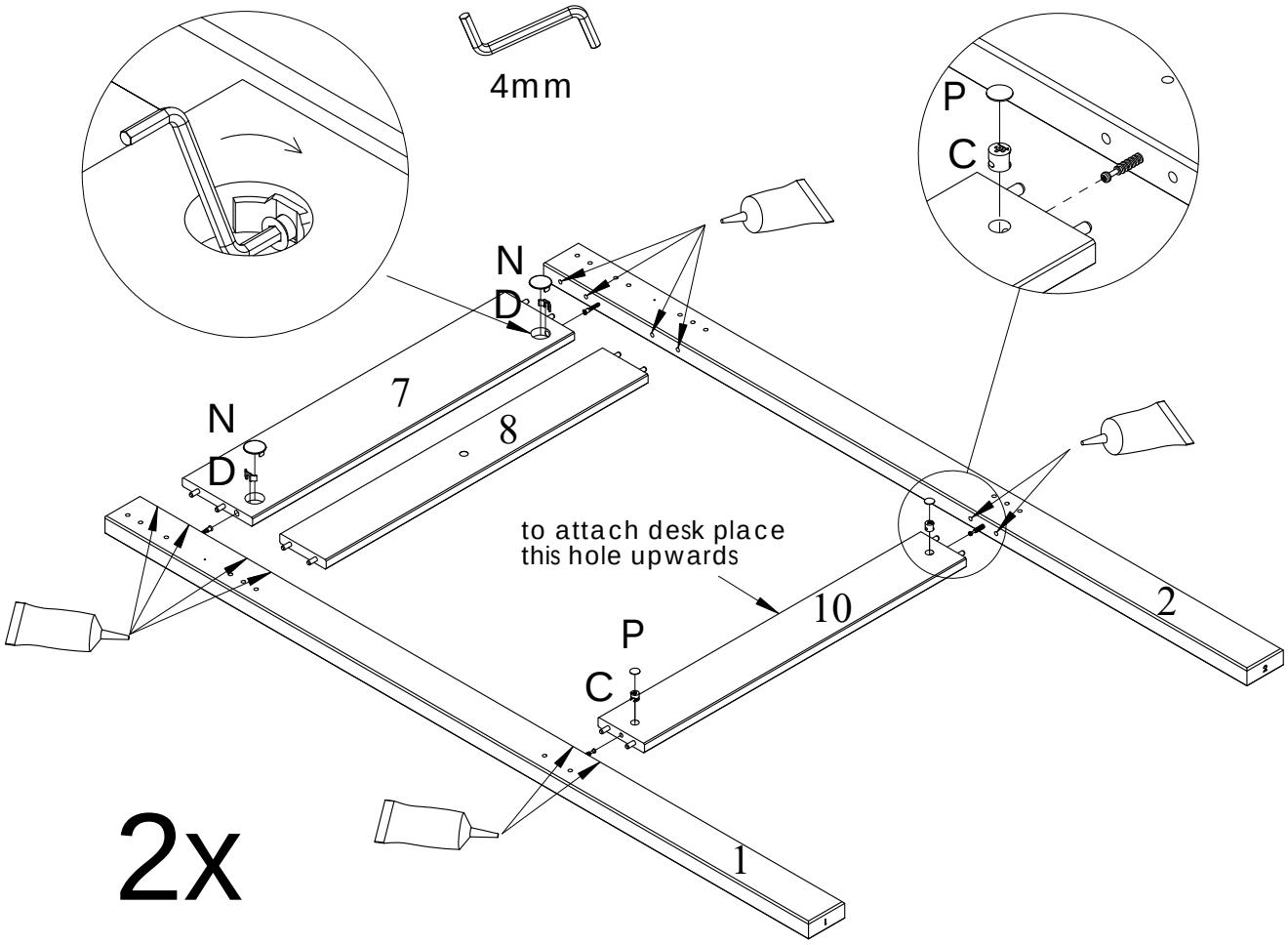

D		D35	x4
C		15x12	x4

N		D35x12	x4
P		D20	x4

4 Always placed inside the ladder

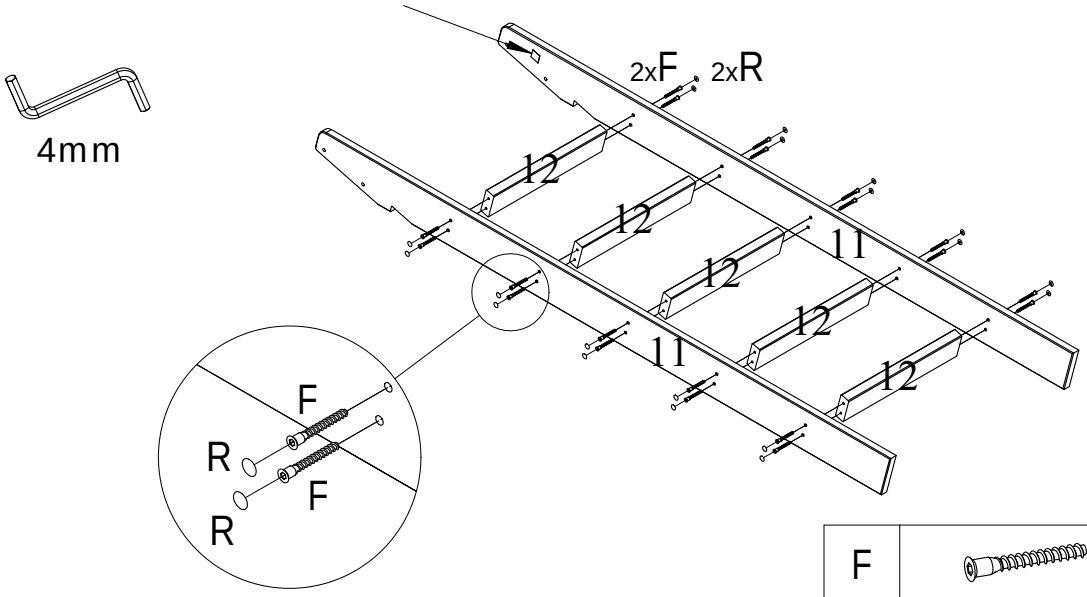

F		7x50	x20
R		D4x13	x20

5

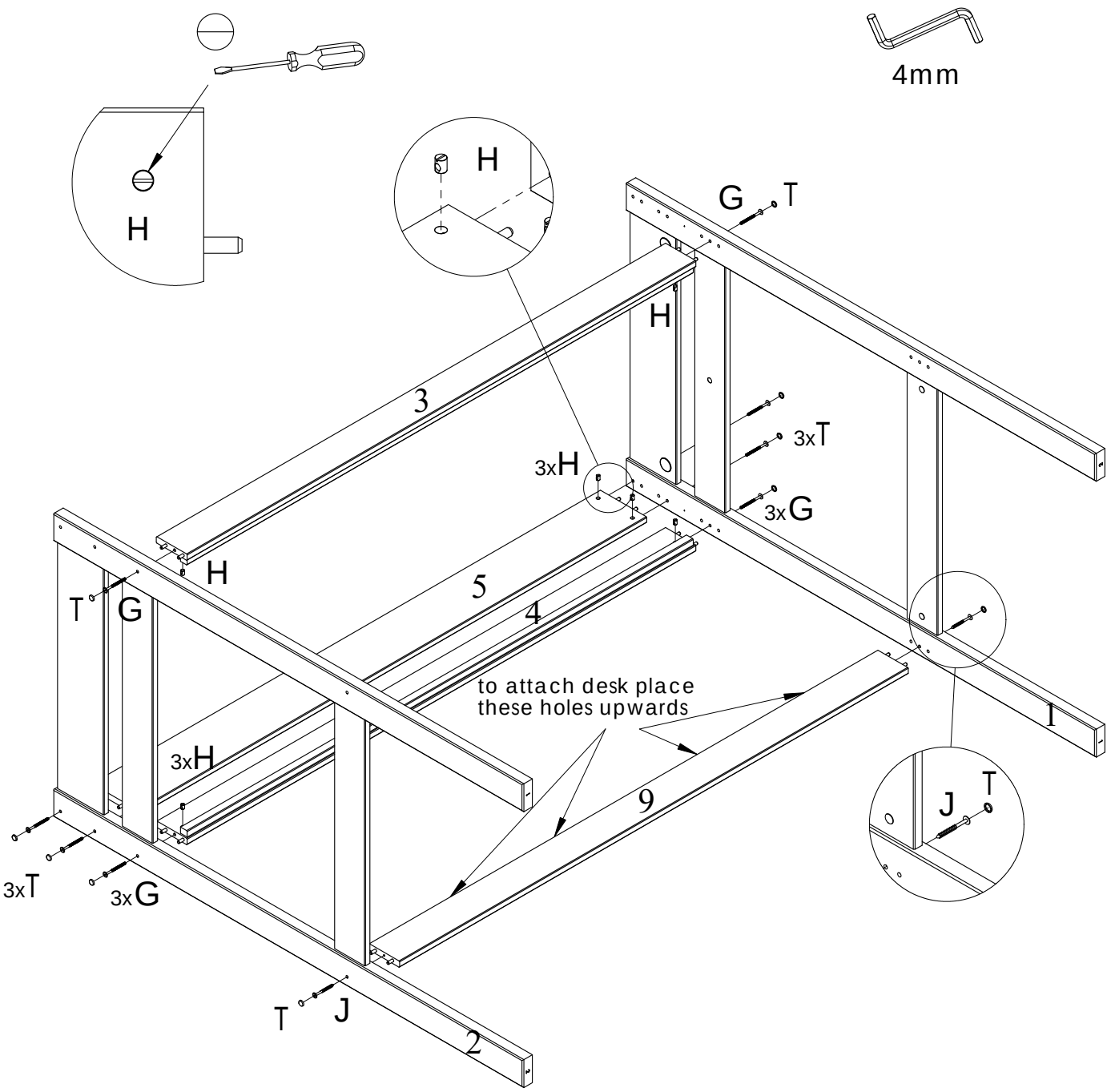

T		D15x18	x10

G	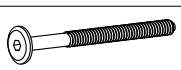	M6x75	x8
H		M6x10x13	x8
J	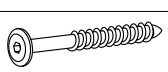	6,3x70	x2

6

Decide which side to attach ladder.

ASSEMBLING LADDER LEFT SIDE

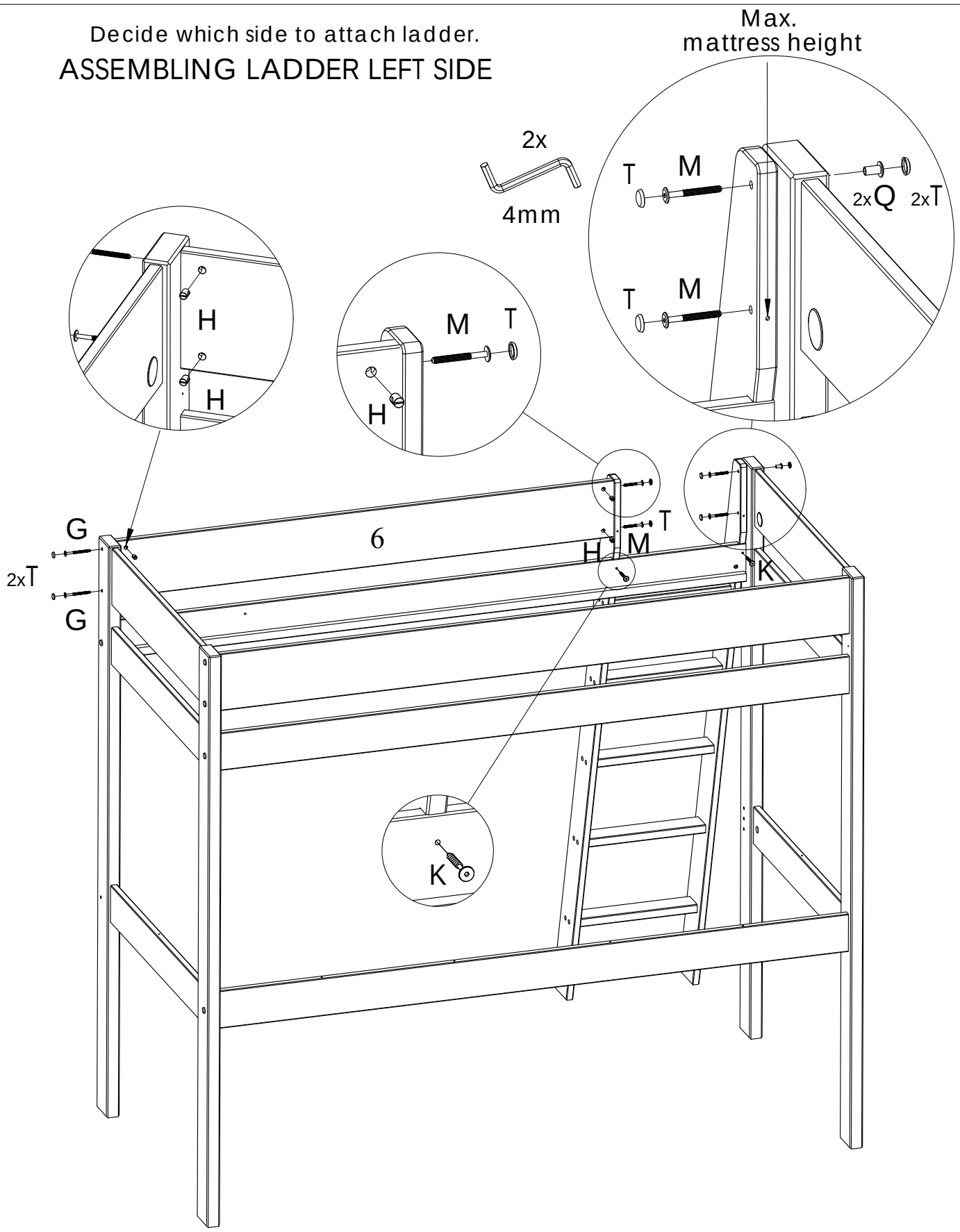

G	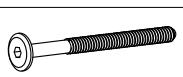	M6x75	x2
M	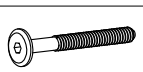	M6x55	x4
H		M6x10x13	x4

Q		M6x15x15	x2
K	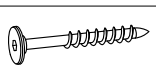	55/12,5x5	x2
T		D15x18	x8

7

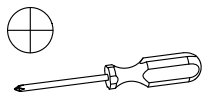

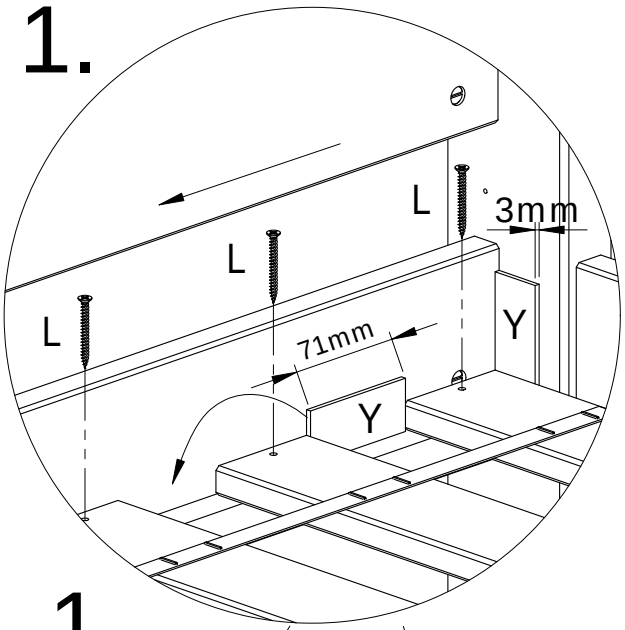

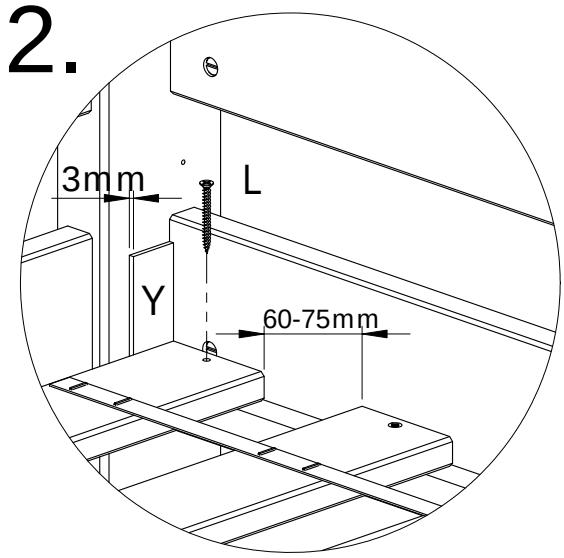

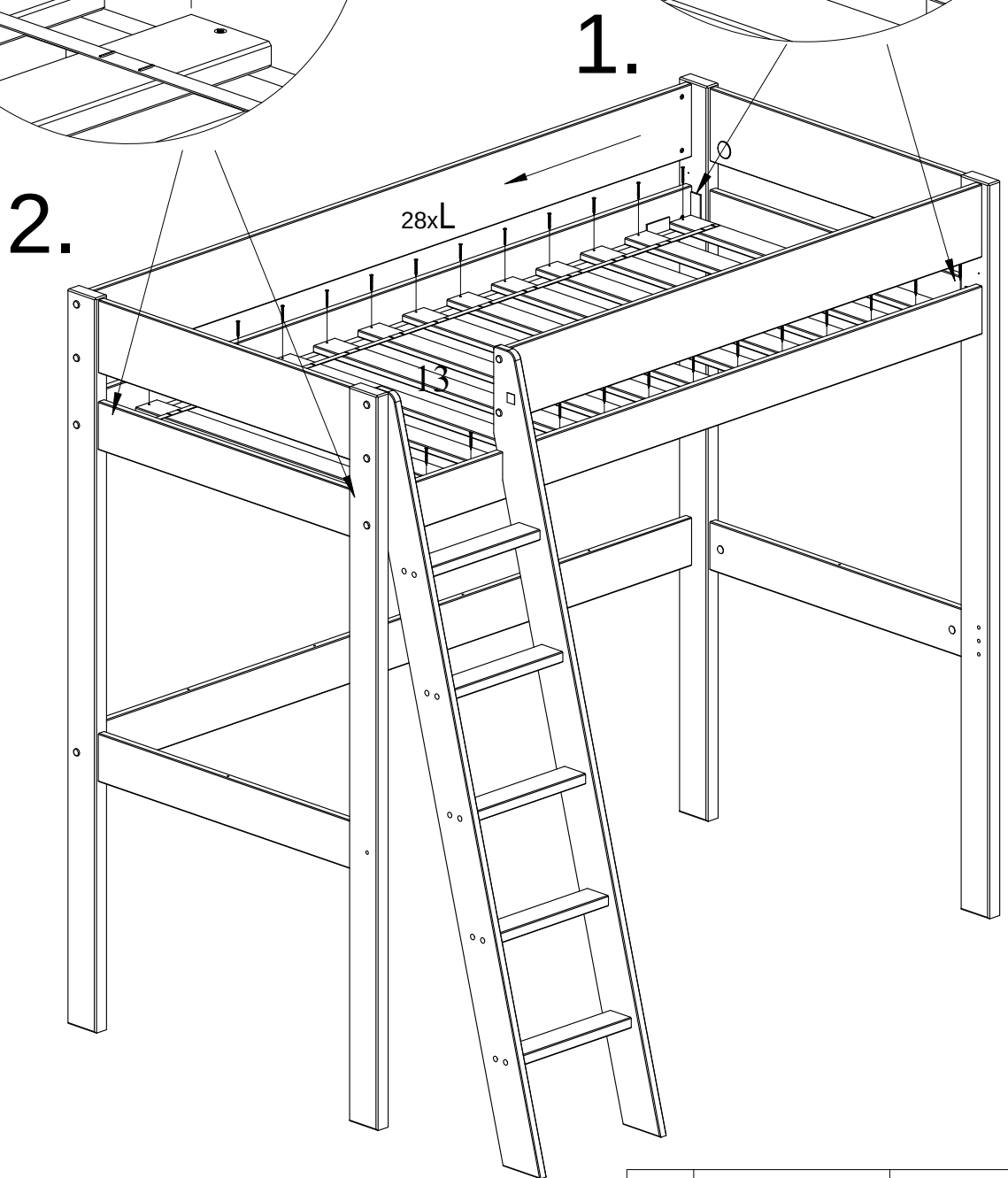

L	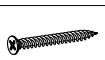	3,5x40	x28
Y	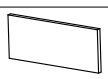	71x30x3	x2

8

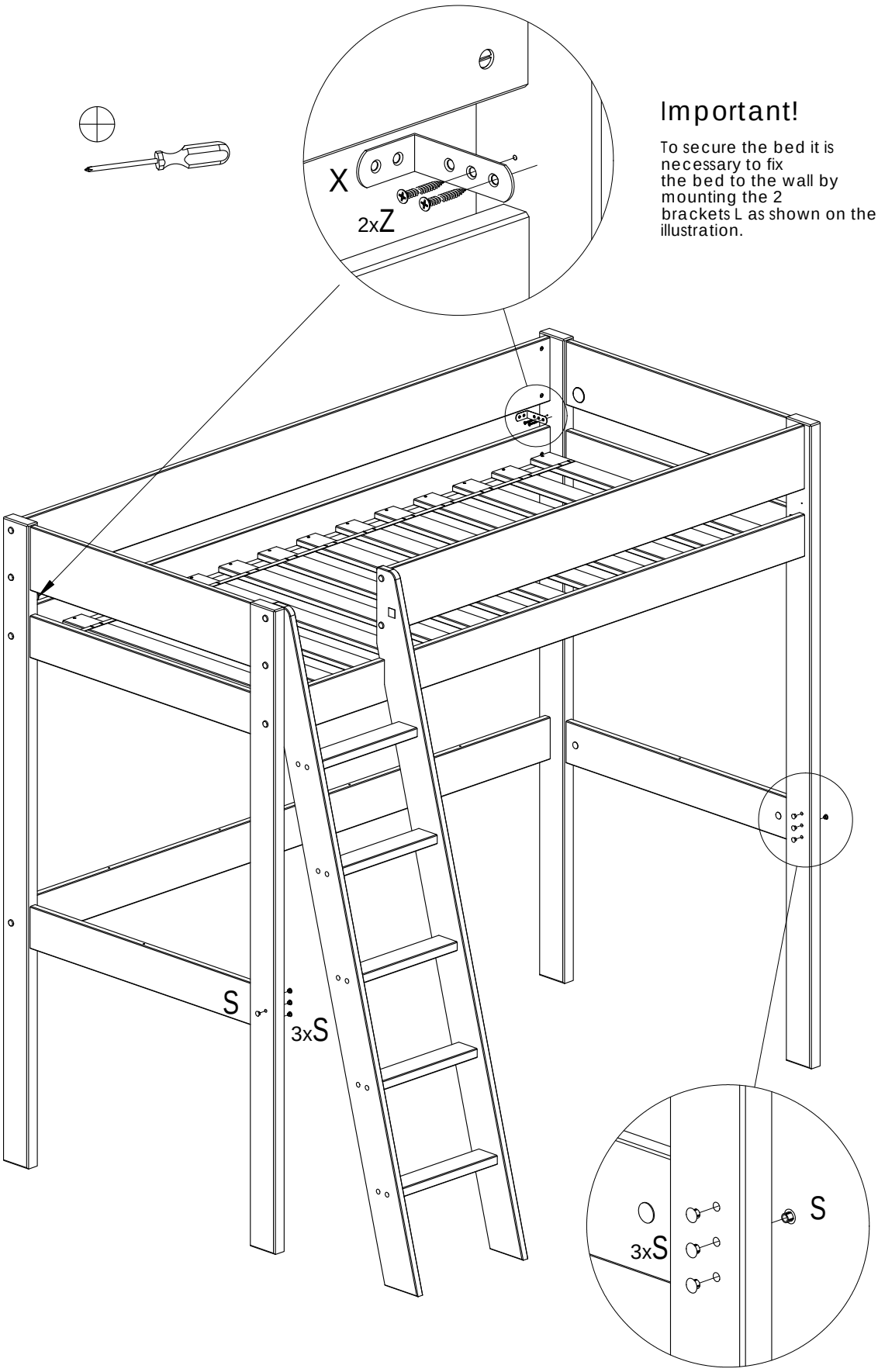

Important!

To secure the bed it is necessary to fix the bed to the wall by mounting the 2 brackets L as shown on the illustration.

S		D8x13	x8
X	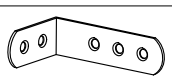	20x42x70	x2
Z		4x30	x4

Gaming Desk

????????

Assembly instructions - please keep for future reference

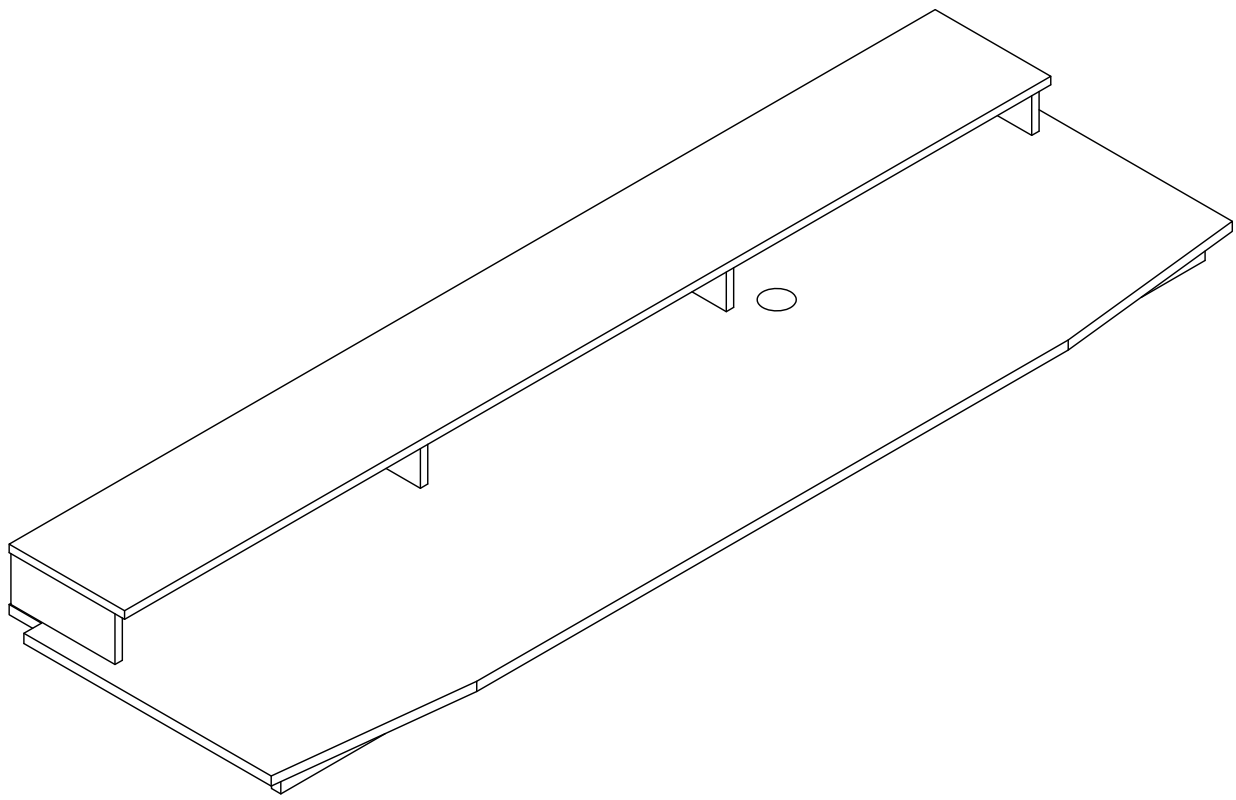

Dimensions
Width- 208 cm
Depth- 65 cm
Height- 13,5 cm

Important- Please read these instructions fully before starting assembly

If you need help or have damaged or missing parts, call the **Customers Helpline:** 03301241100
E mail: enquiries@bensonsforbeds.co.uk

Ver 11 20

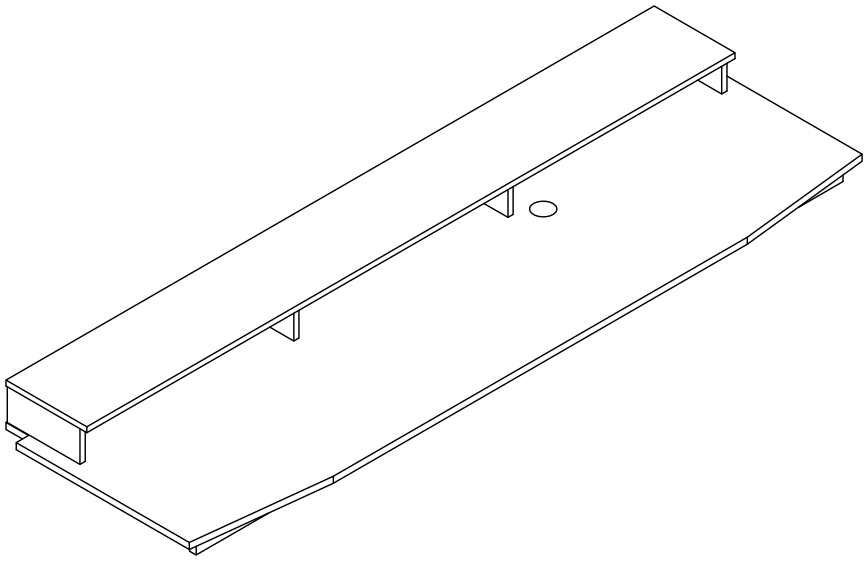

Components- Panels

Please check that you have the panels listed below

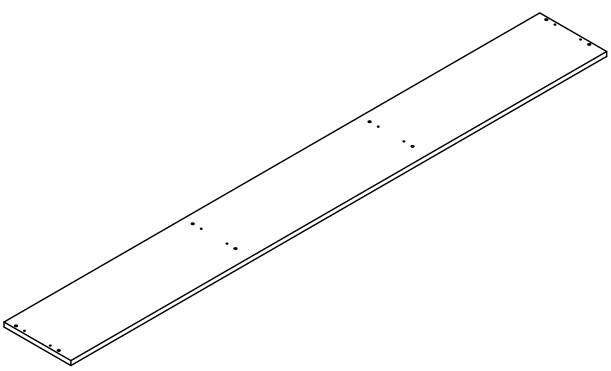

1 Top x1
(200,4x25x1,6 cm)

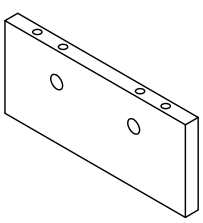

2 Partition panel x4
(10x22,5x1,6 cm)

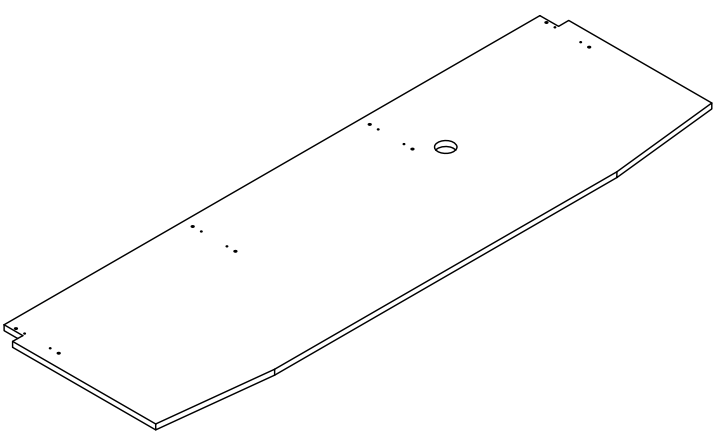

3 Table top x1
(208x65x1,9 cm)

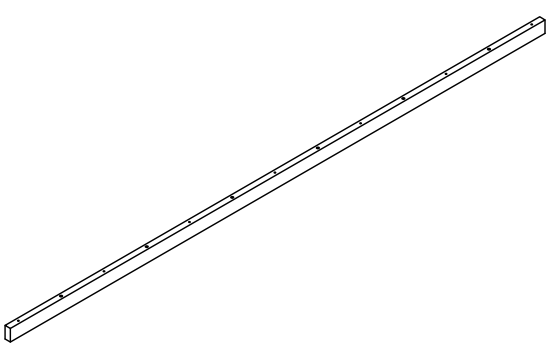

4 Support rails x1
(200x4,4x2 cm)

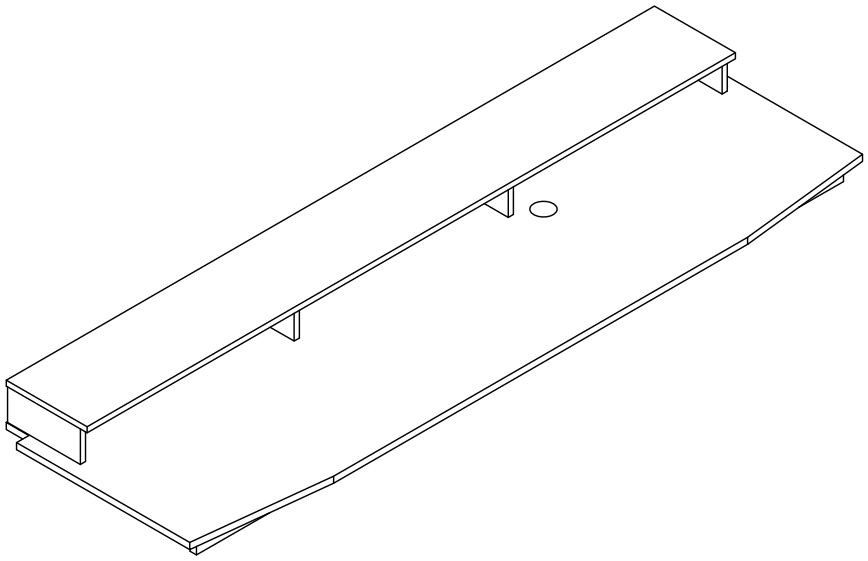

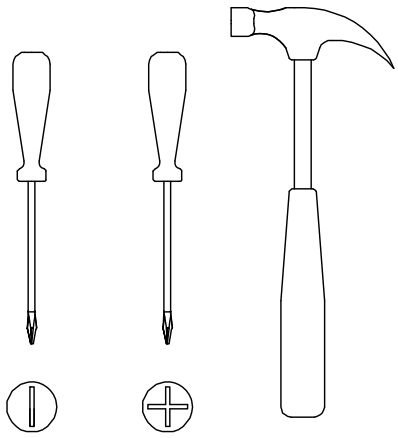

Tools that are needed

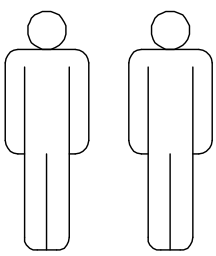

Components- Fittings

Please check that you have the fittings listed below

A	B	C	D	E	F
				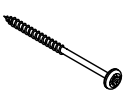	
8x30 22x	8x	8x	5x50 8x	4,5x50 8x	4x15 4x

G	H
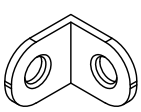	
2x	1x

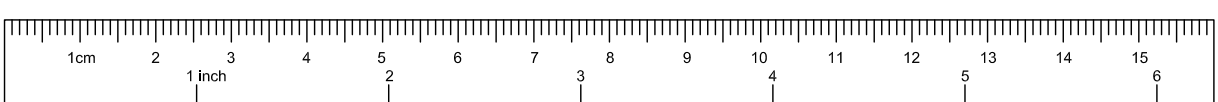

Rulers- Use this ruler to help correctly identify the screws

Step 1

In this step use these fittings:

Ax22

Insert dowels **A** in back panel **2** and partition panels **4**. Tap gently with a small hammer.

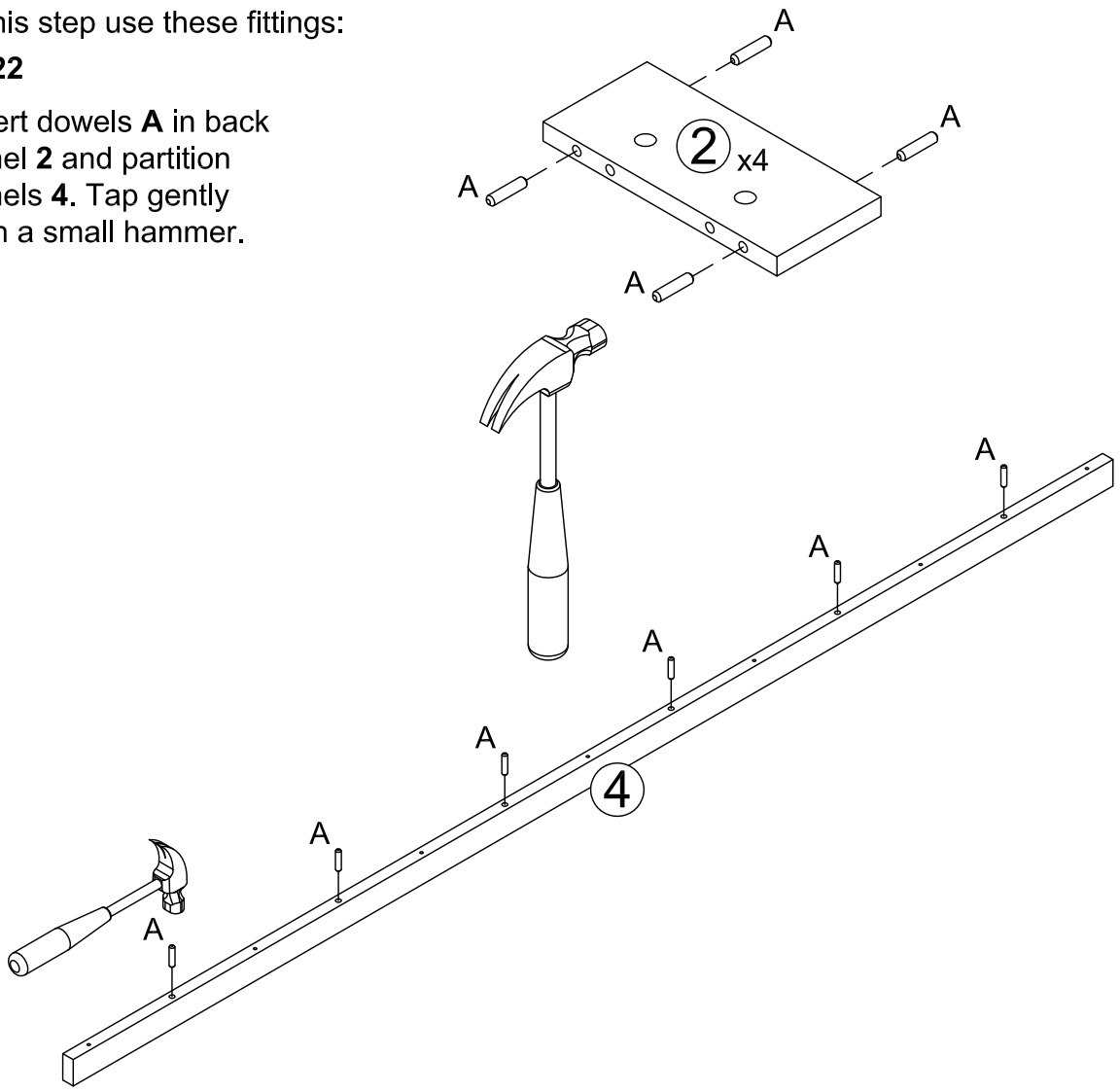

Step 2

In this step use these fittings:

Bx8

Place eccentric bolts **B** in Top **1** by using Phillips head screwdriver.
Do not overtight!

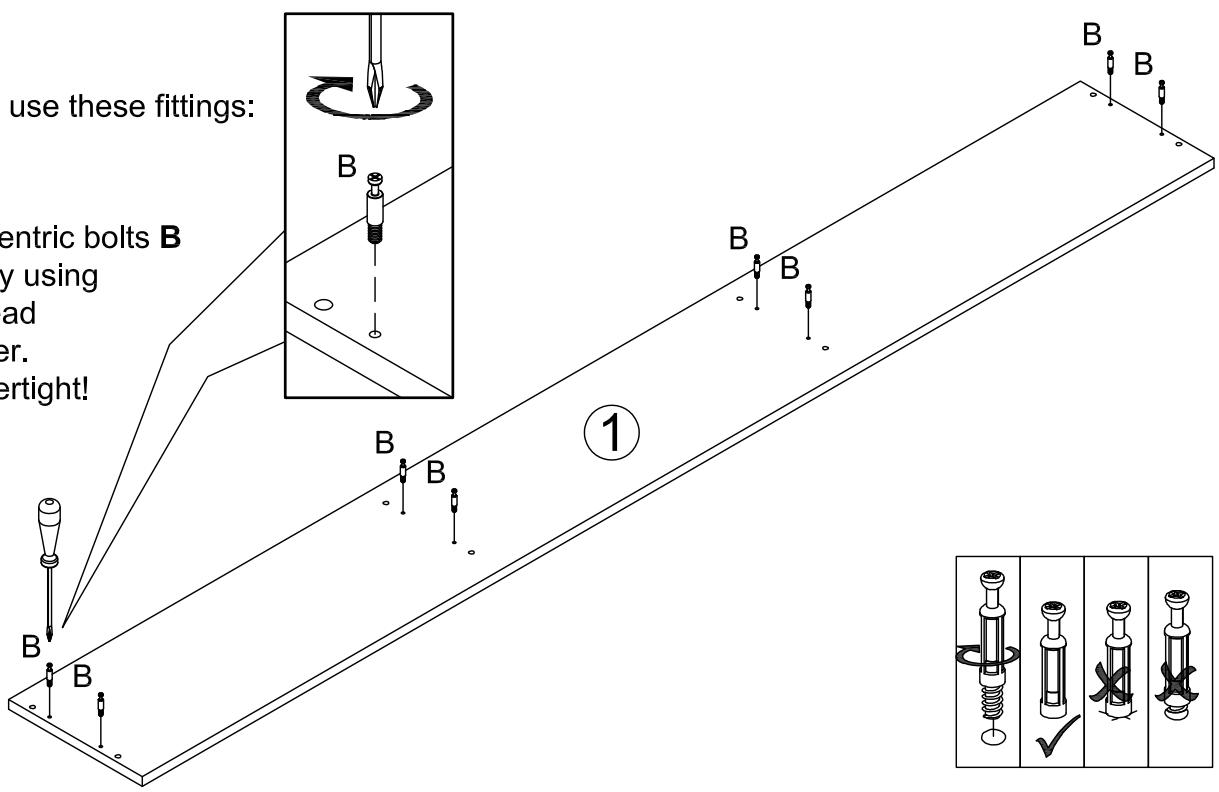

Step 3

In this step use these fittings:

Cx8
Dx8
Ex7

Assemble partition panel **2** to table top **3** by pushing them together. Insert locking nut **C** using Phillips head screwdriver. Fasten with connecting bolts **D** using allen key **H**.

Assemble support rail **4** to table top **3** by pushing them together. Fasten with screws **E** using Phillips head screwdriver.

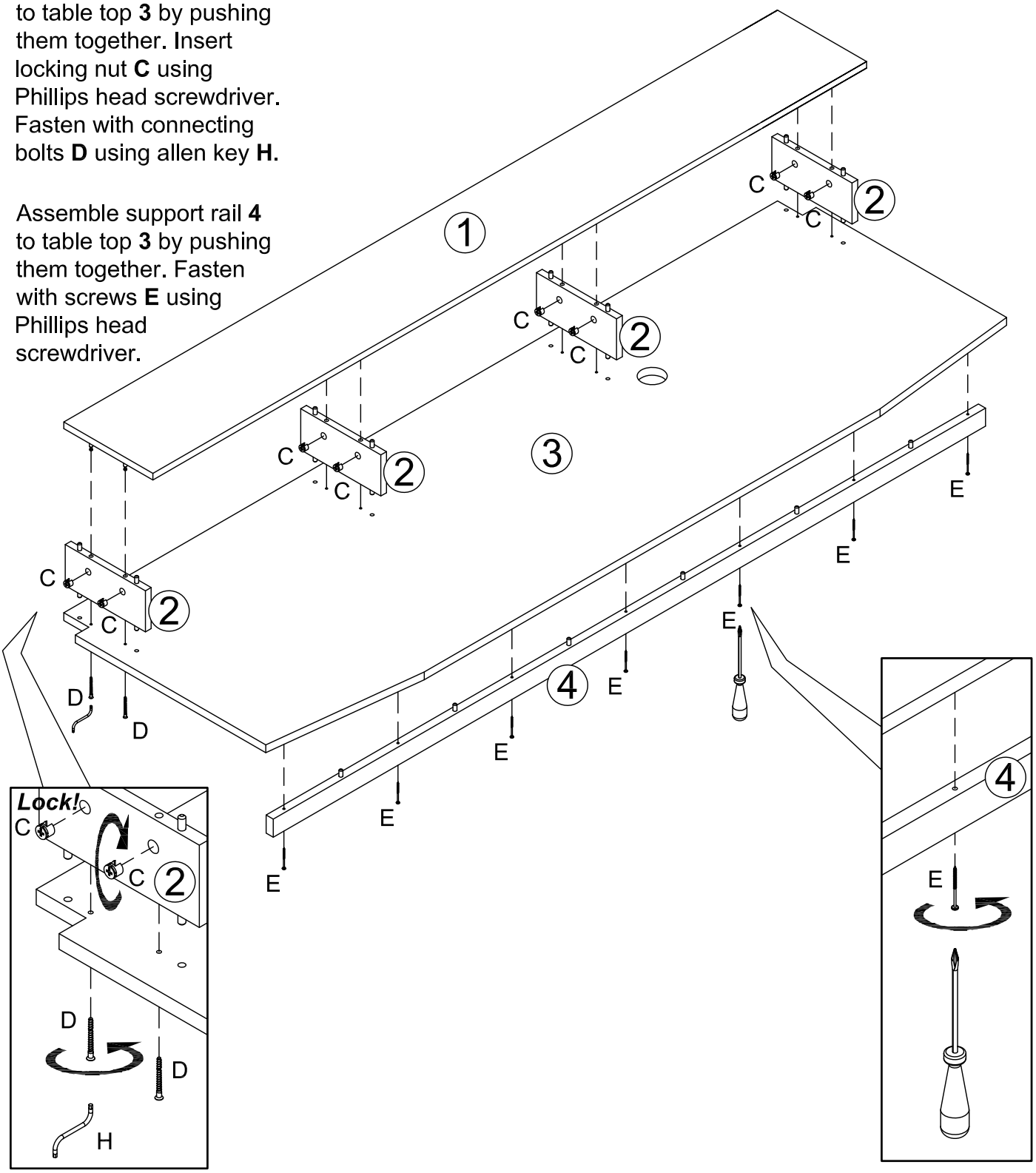

Step 4

In this step use these fittings:

Gx2
Fx4

Attach Gaming Desk to your bed.
Fasten tabel top **3** to bed with screws **F** and using Phillips head screw driver.

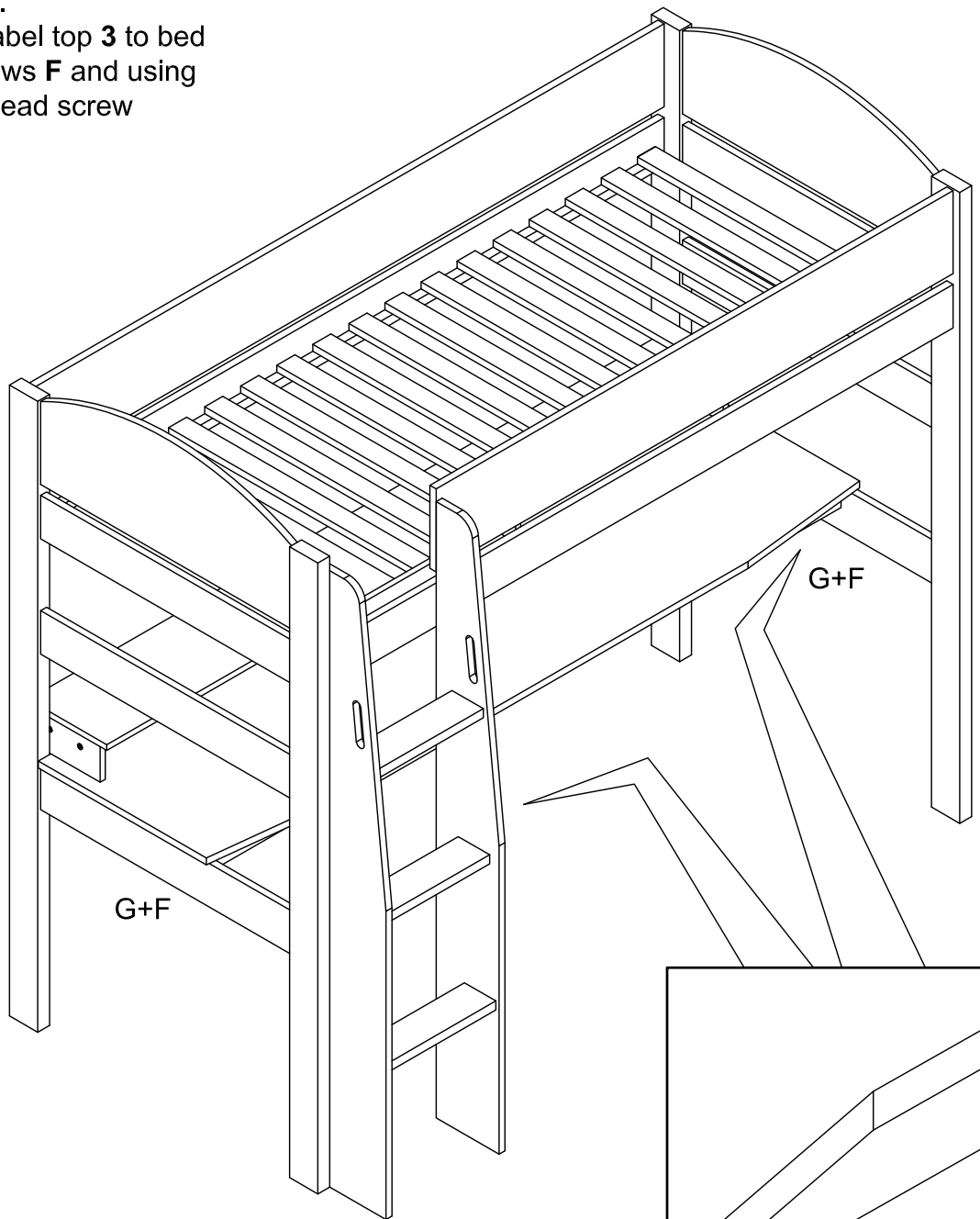

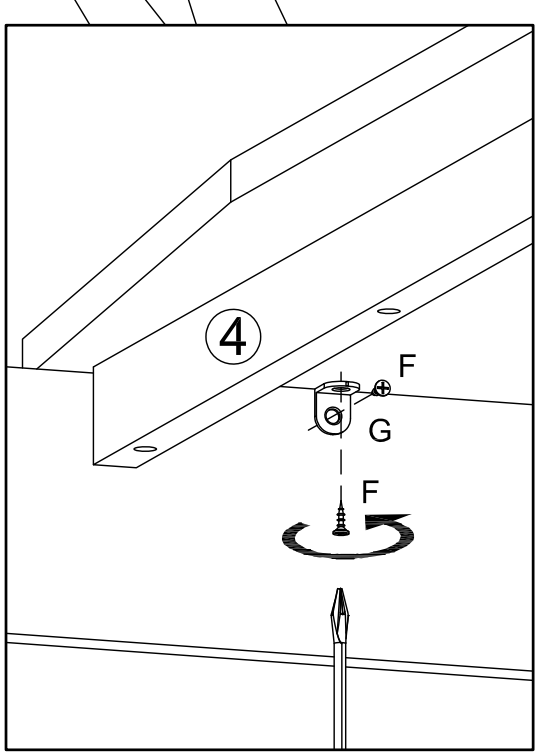

Step 5
(Optional!)

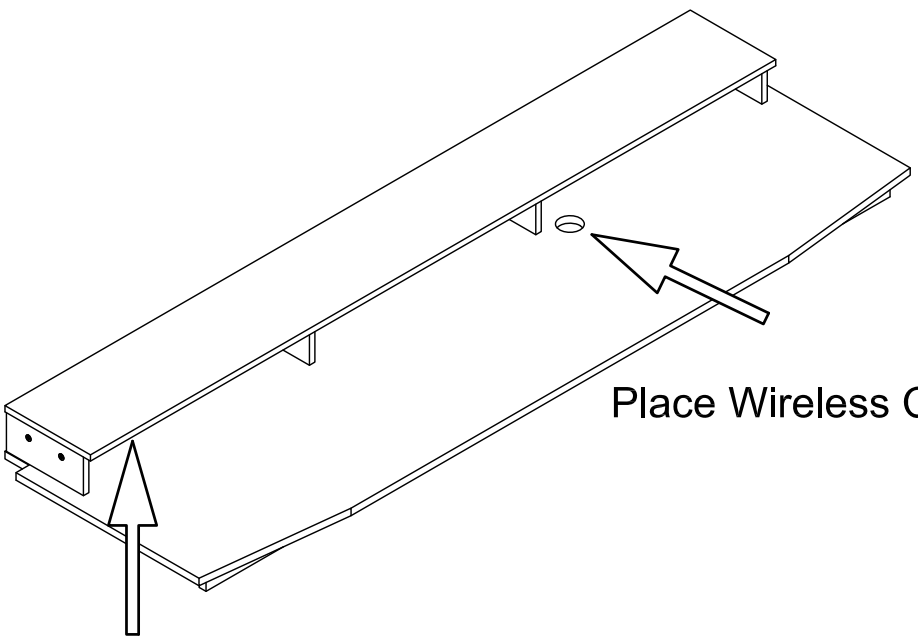

Customer Notice

Congratulations on your recent purchase of furniture!

Customer Service:

For any spare or missing parts requests please contact us through either:

Phone: 01274 809402

Email: service@kids-avenue.co.uk

By Post: Kids-Avenue, The Old Mill House, Dockfield Rd, Shipley, BD17 7AD

(Our office is open during normal working hours Mon-Fri 9.ooam – 5.00pm)

Please ensure that you provide all product information to avoid delays in processing. We require:

Product Name

Colour

Part No required (from assembly instructions)

Quantity Required

Your details including; Name, Address, Postcode and Contact Number

Our product control team has ensured a high quality product that we are sure you will be pleased with. Any components produced from solid wood will contain knots, which is a natural feature and not a defect.